LOT 37
AMELIA CONCOURSE PH 3 UNIT B
OR 2365/1256

MAYO SERVILLANO JR & JENNIFER
95209 ORCHID BLOSSOM TRAIL
FERNANDINA BEACH, FL 32034

2024

30-2N-28-0152-0037-0000

BUILDING CHARACTERISTICS

ELEMENT	CD	CONSTRUCTION
Exterior Wall	31	HARDIE BRD 100
Roof Structur	03	GABLE/HIP 100
Roof Cover	03	COMP SHNGL 100
Interior Wall	05	DRYWALL 100
Interior Floo	13	LVT/LAMNT 60
Interior Floo	14	CARPET 40
Air Condition	03	CENTRAL 100
Heating Type	04	AIR DUCTED 100
Bedrooms		5 100
Bathrooms		3 100
Frame	02	WOOD FRAME 100
Stories	2.	2. 100
Units		0 100
Occupancy	00	NONE 100
Quality	04	Quality Level 04
DOR CODE	0100	SINGLE FAMILY
MAP NUM		MKT AREA 04
NEIGHBORHOOD/LOC	4067.200	

AREA TYPE	TOTAL GROSS AREA	PCT OF BASE	TOT ADJ AREA	SUBAREA MARKET VALUE
BAS	2,215	100	2,215	222,883
FGR	380	55	209	21,030
FOP	50	30	15	1,509
FOP	308	30	92	9,257
FUS	470	100	470	47,293
PTO	252	5	13	1,308
STR	24	10	2	201
TOTALS	3,699		3,016	303,483

MARKET ADJUSTMENTS

TYPE	MDL	EFF. AREA	TOT ADJ PTS	EFF. BASE RATE	REPL. COST NEW	AYB	EYB	ECON	FNCT		NORM	% COND
0100	01	3,016	106.4532	101.13	305,008	2021	2021	0	0	0	0.50	99.50

1 SINGLE FAM – 100% - 2022 Heated Area: 2685 HX Base Yr 2022

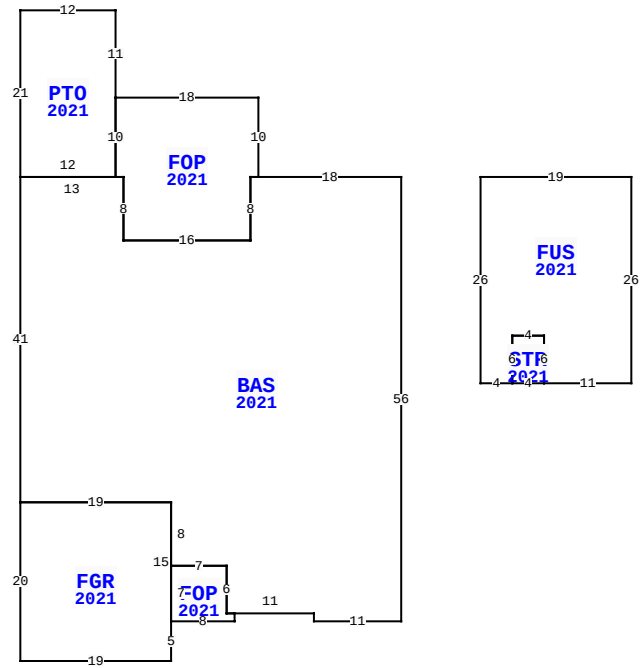

95209 ORCHID BLOSSOM TR, FERNANDINA BEACH

BLD DATE	03/03/2023 NW	LGL DATE	
XF DATE		LAND DATE	
INC DATE		AG DATE	

NASSAU COUNTY PROPERTY

PAGE 1 of 1 4

VALUATION SUMMARY

VALUATION BY		STANDARD
Tax Group: 4	Tax Dist:	
BUILDING MARKET VALUE		303,483
TOTAL MARKET OB/XF VALUE		4,087
TOTAL LAND VALUE - MARKET		75,000
TOTAL MARKET VALUE		382,570
SOH/AGL Deduction		34,398
ASSESSED VALUE		348,172
TOTAL EXEMPTION VALUE	HX HB	50,000
BASE TAXABLE VALUE		298,172
TOTAL JUST VALUE		382,570
NCON VALUE		0
INCOME VALUE		
PREVIOUS YEAR MKT VALUE		368,875

PERMIT NUM	DESCRIPTION	AMT	ISSUED
C2108221	CO ISSUED	0	12/30/2021
B2108221	NEW CONSTR	378,082	06/22/2021

SALES DATA

OFF RECORD Number	DATE	TYPE INST	Q / U	V / I	RSN CD	SALE PRICE
2526/1872	12/30/2021	WD	Q	I	01	416,700
GRANTOR: DREAM FINDERS HOMES L						
GRANTEE: MAYO SERVILLANO M J						
2468/1408	6/04/2021	WD	U	V	30	496,000
GRANTOR: DFC AMELIA CONCOURSE						
GRANTEE: DREAM FINDERS HOMES						

BUILDING NOTES

BUILDING DIMENSIONS

BAS=[YR=2021] W18 FOP=[YR=2021] N10 W18 PTO=[YR=2021] N11 W12 S21 E12 N10$ S10 E1 S8 E16 N8 E1$ W1 S8 W16 N8 W13 S41 FGR=[YR=2021] S20 E19 N5 FOP=[YR=2021] E8 N1 W1 N6 W7 S7$ N15 W19$ E19 S8 E7 S6 E11 S1 E11 N56$ PTR=E10 FUS=[YR=2021] E19 S26 W11 STR=[YR=2021] W4 N6 E4 S6$ N6 W4 S6 W4 N26$ W10$.

EXTRA FEATURES

LN	OB/XF CODE	DESCRIPTION	BLD	CAP	L	W	UNITS	UT	Adj R	ADJ UNIT PRICE	ORIG COND	YEAR ON	YEAR ACTUAL	Q	% COND	OB/XF MKT VALUE	NOTES
1	0810	CONCRETE A	0	100	0	0	599.00	SF	6.50	6.50	100	2021	2021	3	99	3,855	
2	0810	CONCRETE A	0	100	3	12	36.00	SF	6.50	6.50	100	2021	2021	3	99	232	

LAND DESCRIPTION

TOTAL OB/XF 4,087

LN	USE CODE	CLS	LAND USE DESCRIPTION	CAP	RD	LOC ZONE	FRONT	DEPTH	TOT LND UTS	UNIT TYPE	DT	DPTH FACT	% COND	TOT ADJ	UNIT PRICE	ADJ UNIT PRICE	LAND VALUE	OTHER ADJUSTMENTS AND NOTES	YEAR	DENSITY	DECL	FRZ	YR	CONSRV
1	000100	C	SFR	100		RSF-2	0.00	0.00	1.00	LT		1.00	1.00	1.00	75,000.00	75,000.00	75,000							

REVIEW DATE 01/18/2022 BY DJ Total Acres: 0.00 Total Land Value: 75,000 Market: 0 Agricultural: 0 Common: 75,000 PRINTED 08/06/2024 BY SYS