BLK 1 LOT 1
IN OR 1263/414 (EX PT IN OR 664/1636)

MCANINCH TERRI L
45184 NEW OGILVIE RD
CALLAHAN, FL 32011

2024

30-2N-25-400B-0001-0010

NASSAU COUNTY PROPERTY

BUILDING CHARACTERISTICS

ELEMENT	CD	CONSTRUCTION
Exterior Wall	05	AVERAGE 80
Exterior Wall	15	CONC BLOCK 20
Roof Structur	03	GABLE/HIP 100
Roof Cover	03	COMP SHNGL 100
Interior Wall	04	PLYWOOD 50
Interior Wall	05	DRYWALL 50
Interior Floo	14	CARPET 90
Interior Floo	08	SHT VINYL 10
Air Condition	03	CENTRAL 100
Heating Type	04	AIR DUCTED 100
Bedrooms		3 100
Bathrooms		2 100
Frame	02	WOOD FRAME 100
Stories	2.	2. 100
Units		0 100
Occupancy	00	NONE 100
Quality	03	Quality Level 03
DOR CODE	0100	SINGLE FAMILY
MAP NUM		MKT AREA 07
NEIGHBORHOOD/LOC	7001.00	

AREA TYPE	TOTAL GROSS AREA	PCT OF BASE	TOT ADJ AREA	SUBAREA MARKET VALUE
BAS	360	100	360	29,896
BAS	816	100	816	67,765
FCP	576	25	144	11,959
FEP	144	80	115	9,550
FOP	424	30	127	10,547
FSP	180	40	72	5,979
FUS	1,048	100	1,048	87,031
PTO	304	5	15	1,246
UOP	52	20	10	831
UST	128	45	58	4,816
TOTALS	4,032		2,765	229,618

MARKET ADJUSTMENTS

TYPE	MDL	EFF. AREA	TOT ADJ PTS	EFF. BASE RATE	REPL. COST NEW	AYB	EYB	ECON	FNCT		NORM	% COND
0100	01	2,765	102.6000	97.47	269,505	1983	1993	0	0	0	14.80	85.20

1 SINGLE FAM – 0% - 0 Heated Area: 2224 HX Base Yr

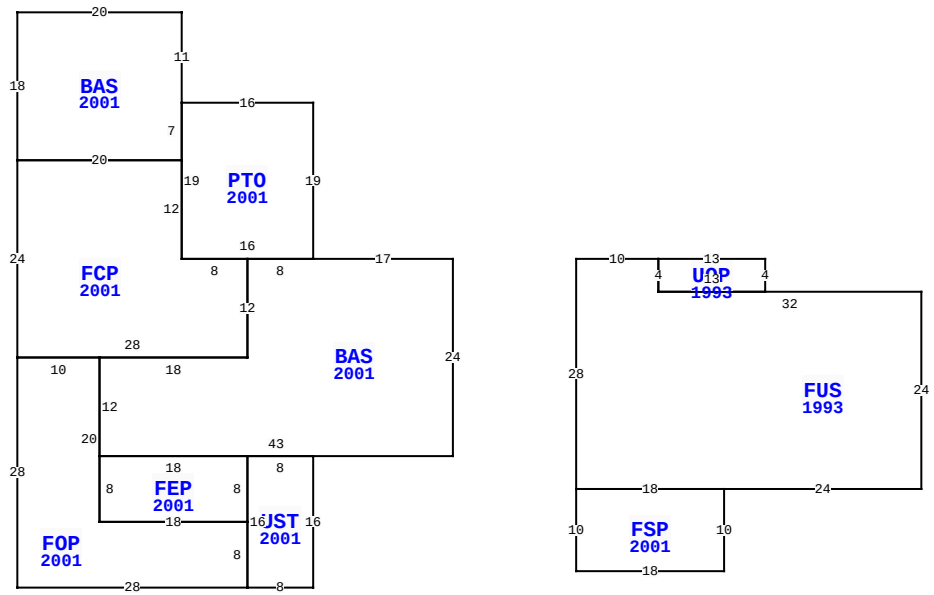

45184 NEW OGILVIE RD, CALLAHAN

BLD DATE		LGL DATE	
XF DATE		LAND DATE	06/02/2023 MLU
INC DATE		AG DATE	

VALUATION SUMMARY

VALUATION BY	STANDARD
Tax Group: 1	Tax Dist:
BUILDING MARKET VALUE	229,618
TOTAL MARKET OB/XF VALUE	8,605
TOTAL LAND VALUE - MARKET	70,000
TOTAL MARKET VALUE	308,223
SOH/AGL Deduction	54,015
ASSESSED VALUE	254,208
TOTAL EXEMPTION VALUE	0
BASE TAXABLE VALUE	254,208
TOTAL JUST VALUE	308,223
NCON VALUE	0
INCOME VALUE	
PREVIOUS YEAR MKT VALUE	278,197

PERMIT NUM	DESCRIPTION	AMT	ISSUED
4134	REPAIR/RRF	0	06/01/2017

SALES DATA

OFF RECORD Number	DATE	TYPE INST	Q U	V I	RSN CD	SALE PRICE
1263/0414	3/22/2003	QC	U	I	01	21,000

GRANTOR: MCANINCH MARKHAM J SR

GRANTEE: MCANINCH MARKHAM J

BUILDING NOTES

BUILDING DIMENSIONS

BAS=[YR=2001] W17 PTO=[YR=2001] N19 W16 BAS=[YR=2001] N11 W20 S18 FCP=[YR=2001] S24 FOP=[YR=2001] S28 E28 UST=[YR=2001] E8 N16 W8 FEP=[YR=2001] W18 S8 E18 N8 $ S16 $ N8 W18 N20 W10 $ E28 N12 W8 N12 W20 $ E20 N7 $ S19 E16 $ W8 S12 W18 S12 E43 N24 $ PTR= E15 FUS=[YR=1993] E10 UOP=[YR=1993] E13 S4 W13 N4 $ S4 E32 S24 W24 FSP=[YR=2001] S10 W18 N10 E18 $ W18 N28 $ W15 $.

EXTRA FEATURES

LN	OB/XF CODE	DESCRIPTION	BLD	CAP	L	W	UNITS	UT	Adj R	ADJ UNIT PRICE	ORIG COND	YEAR ON	YEAR ACTUAL	Q	% COND	OB/XF MKT VALUE	NOTES
1	0500	FP-PRE FAB	0	0	0	0	1.00	UT	3,500.00	3,500.00	100	1991	1991	3	70	2,450	
2	0812	CONCRETE C	0	0	0	0	1,216.00	SF	4.00	4.00	100	1992	1992	3	64	3,113	
3	0803	ASPHALT C	0	0	0	0	3,042.00	SF	2.00	2.00	100	1998	1998	3	50	3,042	

LAND DESCRIPTION

TOTAL OB/XF 8,605

LN	USE CODE	CLS	LAND USE DESCRIPTION	CAP	RD	LOC ZONE	FRONT	DEPTH	TOT LND UTS	UNIT TYPE	DT	DPTH FACT	% COND	TOT ADJ	UNIT PRICE	ADJ UNIT PRICE	LAND VALUE	OTHER ADJUSTMENTS AND NOTES	YEAR	DENSITY	DECL	FRZ	YR	CONSRV
1	000000	C	VAC RES	0		CG -	100.00	100.00	100.00	FF		1.00	1.00	1.00	700.00	700.00	70,000							

REVIEW DATE 08/15/2019 BY KBA Total Acres: 0.00 Total Land Value: 70,000 Market: 0 Agricultural: 0 Common: 70,000 PRINTED 08/06/2024 BY SYS