PT NE1/4 OF SEC 30-2N-25E
IN OR 770/290

HARDAGE CHARLES J III & KAREN
45069 BUTLER LANE
CALLAHAN, FL 32011

2024

30-2N-25-0000-0003-0050

NASSAU COUNTY PROPERTY

BUILDING CHARACTERISTICS

ELEMENT	CD	CONSTRUCTION
Exterior Wall	20	FACE BRICK 100
Roof Structur	08	IRREGULAR 100
Roof Cover	03	COMP SHNGL 100
Interior Wall	05	DRYWALL 100
Interior Floo	14	CARPET 80
Interior Floo	02	MIN PLYWD 20
Air Condition	03	CENTRAL 100
Heating Type	04	AIR DUCTED 100
Bedrooms		5 100
Bathrooms		3 100
Frame	02	WOOD FRAME 100
Stories	2.	2. 100
Units		0 100
Occupancy	00	NONE 100
Quality	03	Quality Level 03
DOR CODE	0100	SINGLE FAMILY
MAP NUM		MKT AREA 07
NEIGHBORHOOD/LOC	7001.00	

AREA TYPE	TOTAL GROSS AREA	PCT OF BASE	TOT ADJ AREA	SUBAREA MARKET VALUE
BAL	192	15	29	2,332
BAS	1,848	100	1,848	148,566
BAS	1,400	100	1,400	112,550
DCK	192	10	19	1,527
DCK	568	10	57	4,582
FGR	506	55	278	22,349
FOP	144	30	43	3,457
FST	144	55	79	6,351
FUS	769	100	769	61,822
FUS	768	100	768	61,741
TOTALS	7,957		5,575	448,191

MARKET ADJUSTMENTS

TYPE	MDL	EFF. AREA	TOT ADJ PTS	EFF. BASE RATE	REPL. COST NEW	AYB	EYB	ECON	FNCT		NORM	% COND
0100	01	5,575	99.5600	94.58	527,284	1990	2003	0	0	0	15.00	85.00

1 SINGLE FAM – 100% - 1997 Heated Area: 4785 HX Base Yr 1997

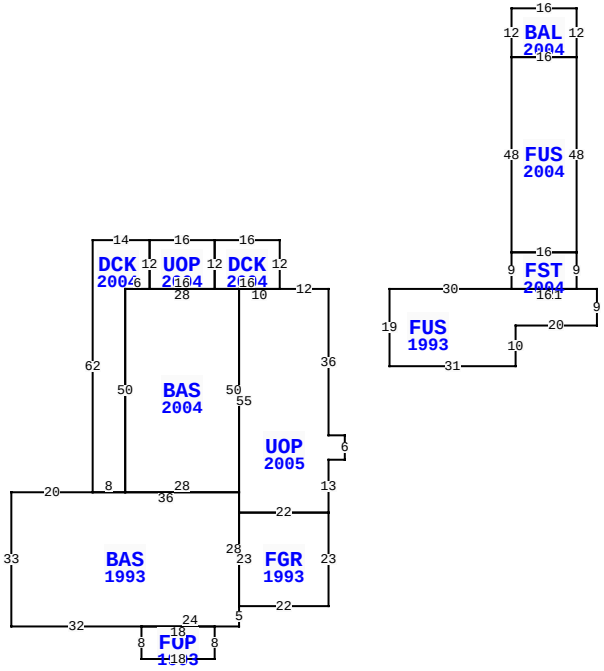

** This building has 12 Sub-Areas

45069 BUTLER LN, CALLAHAN

BLD DATE		LGL DATE	
XF DATE		LAND DATE	
INC DATE		AG DATE	

VALUATION SUMMARY

VALUATION BY		STANDARD
Tax Group: 1	Tax Dist:	
BUILDING MARKET VALUE		448,191
TOTAL MARKET OB/XF VALUE		21,523
TOTAL LAND VALUE - MARKET		63,000
TOTAL MARKET VALUE		532,714
SOH/AGL Deduction		234,719
ASSESSED VALUE		297,995
TOTAL EXEMPTION VALUE	HX HB	50,000
BASE TAXABLE VALUE		247,995
TOTAL JUST VALUE		532,714
NCON VALUE		0
INCOME VALUE		
PREVIOUS YEAR MKT VALUE		514,741

PERMIT NUM	DESCRIPTION	AMT	ISSUED
R4198	REPAIR/RRF	0	06/01/2018
B2568	ADDITION	50,000	03/16/2003
P2568	NEW CONSTR	0	03/16/2003

SALES DATA

OFF RECORD Number	DATE	TYPE INST	Q U	V I	RSN CD	SALE PRICE
0770/0290	9/04/1996	WD	Q	I		152,900
GRANTOR: POPE GREGORY A & JAMI						
GRANTEE: HARDAGE CHARLES III						
0670/0057	11/10/1992	WD	U	I		85,000
GRANTOR: HIGGINBOTHAM WAYNE						
GRANTEE: POPE GREGORY & JAMI						

BUILDING NOTES

BUILDING DIMENSIONS

UOP=[YR=2005] W12 DCK=[YR=2004] N12 W16 UOP=[YR=2004] W16 DCK=[YR=2004] W14 S62 BAS=[YR=1993] W20 S33 E32 FOP=[YR=1993] S8 E18 N8 W18 $ E24 N5 FGR=[YR=1993] E22 N23 W22 S23 $ N28 BAS=[YR=2004] N50 W28 S50 E28 $ W36 $ E8 N50 E6 N12 $ S12 E16 N12 $ S12 E16 $ W10 S55 E22 N13 E4 N6 W4 N36 $ PTR= E15 FUS=[YR=1993] E30 FST=[YR=2004] N9 FUS=[YR=2004] N48 BAL=[YR=2004] N12 E16 S12 W16 $ E16 S48 W16 $ E16 S9 W16 $ E21 S9 W20 S10 W31 N19 $ W15 $.

EXTRA FEATURES

LN	OB/XF CODE	DESCRIPTION	BLD	CAP	L	W	UNITS	UT	Adj R	ADJ UNIT PRICE	ORIG COND	YEAR ON	YEAR ACTUAL	Q	% COND	OB/XF MKT VALUE	NOTES
1	0812	CONCRETE C	0	100	0	0	1,668.00	SF	4.00	4.00	100	1992	1992	3	64	4,270	
2	0812	CONCRETE C	0	100	0	0	4,817.00	SF	4.00	4.00	100	1994	1994	3	68	13,102	
3	0500	FP-PRE FAB	0	100	0	0	1.00	UT	3,500.00	3,500.00	100	2004	2004	3	88	3,080	
4	0479	VF PICKET	0	100	0	0	48.00	LF	10.00	10.00	100	2003	2003	3	61	293	
5	1242	WD DECK A	0	100	0	0	288.00	SF	10.00	10.00	100	2006	2006	3	27	778	

LAND DESCRIPTION

TOTAL OB/XF 21,523

LN	USE CODE	CLS	LAND USE DESCRIPTION	CAP	RD	LOC ZONE	FRONT	DEPTH	TOT LND UTS	UNIT TYPE	DT	DPTH FACT	% COND	TOT ADJ	UNIT PRICE	ADJ UNIT PRICE	LAND VALUE	OTHER ADJUSTMENTS AND NOTES	YEAR	DENSITY	DECL	FRZ	YR	CONSRV
1	000115	C	SFR ACRES	100	0006	RL	0.00	0.00	3.50	AC		1.00	1.00	1.00	18,000.00	18,000.00	63,000							

REVIEW DATE 01/14/2021 BY KWA Total Acres: 3.50 Total Land Value: 63,000 Market: 0 Agricultural: 0 Common: 63,000 PRINTED 08/06/2024 BY SYS