LOT 34
IN OR 2189/382
AMELIA OAKS PBK 8/85

KELLY WILLIAM G DEC OF TRUST/KELLY WILLIAM G TRUST
1989 AMELIA OAKS DRIVE
FERNANDINA BEACH, FL 32034

2024

29-3N-28-0100-0034-0000

BUILDING CHARACTERISTICS

ELEMENT	CD	CONSTRUCTION
Exterior Wall	10	ABOVE AVG 100
Roof Structur	08	IRREGULAR 100
Roof Cover	11	SLATE 100
Interior Wall	05	DRYWALL 100
Interior Floo	11	CLAY TILE 70
Interior Floo	14	CARPET 30
Air Condition	03	CENTRAL 100
Heating Type	04	AIR DUCTED 100
Bedrooms		3 100
Bathrooms		3.5 100
Frame	02	WOOD FRAME 100
Stories	2.	2. 100
Units		0 100
Occupancy	00	NONE 100
Quality	03	Quality Level 03
DOR CODE	0100	SINGLE FAMILY
MAP NUM		MKT AREA 01
NEIGHBORHOOD/LOC	2104.00	

AREA TYPE	TOTAL GROSS AREA	PCT OF BASE	TOT ADJ AREA	SUBAREA MARKET VALUE
BAS	1,449	100	1,449	280,440
FGR	264	55	145	28,063
FOP	150	30	45	8,709
FOP	152	30	46	8,903
FUS	1,317	100	1,317	254,892
STP	21	10	2	387
STP	21	10	2	387
STR	28	10	3	580
TOTALS	3,402		3,009	582,362

MARKET ADJUSTMENTS

TYPE	MDL	EFF. AREA	TOT ADJ PTS	EFF. BASE RATE	REPL. COST NEW	AYB	EYB	ECON	FNCT		NORM	% COND
0500	01	3,009	119.6920	197.49	594,247	2018	2018	0	0	0	2.00	98.00

1 SFR CUST – 100% - 2019 Heated Area: 2766 HX Base Yr 2019

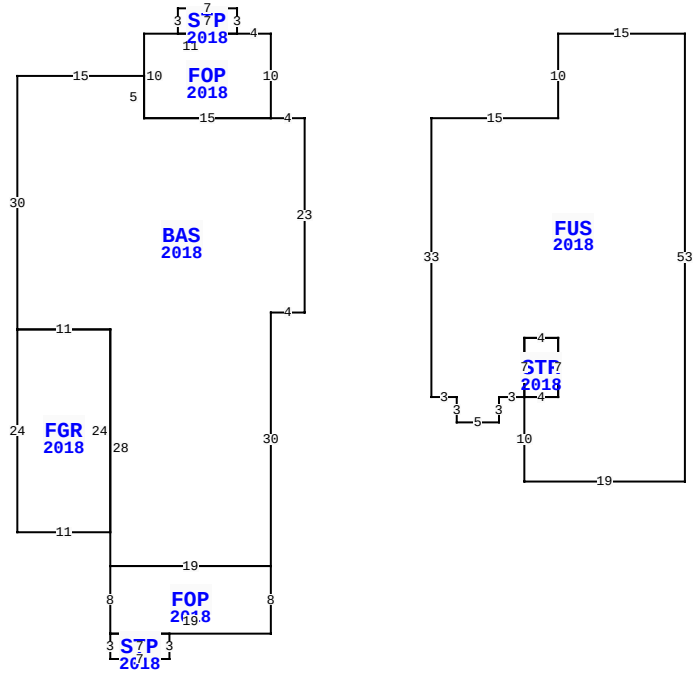

1989 AMELIA OAKS DR, FERNANDINA BEACH

BLD DATE		LGL DATE	
XF DATE		LAND DATE	04/23/2024 MLU
INC DATE		AG DATE	

NASSAU COUNTY PROPERTY

PAGE 1 of 1 2

VALUATION SUMMARY

VALUATION BY		STANDARD
Tax Group: 2	Tax Dist:	
BUILDING MARKET VALUE		582,362
TOTAL MARKET OB/XF VALUE		9,002
TOTAL LAND VALUE - MARKET		250,000
TOTAL MARKET VALUE		841,364
SOH/AGL Deduction		356,805
ASSESSED VALUE		484,559
TOTAL EXEMPTION VALUE	HX HB	50,000
BASE TAXABLE VALUE		434,559
TOTAL JUST VALUE		841,364
NCON VALUE		0
INCOME VALUE		
PREVIOUS YEAR MKT VALUE		710,111

PERMIT NUM	DESCRIPTION	AMT	ISSUED
20170570	NEW CONSTR	306,039	03/01/2017

SALES DATA

OFF RECORD Number	DATE	TYPE INST	Q / U	V / I	RSN CD	SALE PRICE
2189/0382	4/10/2018	SW	Q	I	02	500,900

GRANTOR: D & H HOMES LLC
GRANTEE: KELLY WILLIAM G DEC

BUILDING NOTES

BUILDING DIMENSIONS

BAS=[YR=2018] W4 FOP=[YR=2018] N10 W4 STP=[YR=2018] N3 W7 S3 E7$ W11 S10 E15$ W15 N5 W15 S30 FGR=[YR=2018] S24 E11 N24 W11$ E11 S28 FOP=[YR=2018] S8 STP=[YR=2018] S3 E7 N3 W7 $ E19 N8 W19$ E19 N30 E4 N23$ PTR=E15 FUS=[YR=2018] E15 N10E15 S53 W19 N10 STR=[YR=2018] N7 E4 S7 W4$ E4 N7 W4 S7 W3 S3 W5 N3 W3 N33 $ W15$.

EXTRA FEATURES

LN	OB/XF CODE	DESCRIPTION	BLD	CAP	L	W	UNITS	UT	Adj R	ADJ UNIT PRICE	ORIG COND	YEAR ON	YEAR ACTUAL	Q	% COND	OB/XF MKT VALUE	NOTES
1	0504	FP-ELECTRI	0	100	0	0	1.00	UT	2,000.00	2,000.00	100	2018	2018	3	98	1,960	
2	0855	CONC PAVER	0	100	0	0	360.00	SF	7.00	7.00	100	2018	2018	3	97	2,444	
3	0855	CONC PAVER	0	100	0	0	21.00	SF	7.00	7.00	100	2018	2018	3	97	143	
4	0855	CONC PAVER	0	100	0	0	450.00	SF	10.00	10.00	100	2024	2021		99	4,455	

LAND DESCRIPTION

TOTAL OB/XF 9,002

LN	USE CODE	CLS	LAND USE DESCRIPTION	CAP	RD	LOC ZONE	FRONT	DEPTH	TOT LND UTS	UNIT TYPE	DT	DPTH FACT	% COND	TOT ADJ	UNIT PRICE	ADJ UNIT PRICE	LAND VALUE	OTHER ADJUSTMENTS AND NOTES	YEAR	DENSITY	DECL	FRZ	YR	CONSRV
1	000100	C	SFR	100		R-2	0.00	0.00	1.00	LT		1.00	1.00	1.00	250,000.00	250,000.00	250,000							

REVIEW DATE 06/03/2024 BY KBA Total Acres: 0.00 Total Land Value: 250,000 Market: 0 Agricultural: 0 Common: 250,000 PRINTED 08/06/2024 BY SYS