LOT 32
IN OR 2161/1519
AMELIA OAKS PBK 8/85

PELLEGRINO FRANK P & KAREN E
1981 AMELIA OAKS DR
FERNANDINA BEACH, FL 32034

2024

29-3N-28-0100-0032-0000

BUILDING CHARACTERISTICS

ELEMENT	CD	CONSTRUCTION
Exterior Wall	10	ABOVE AVG 100
Roof Structur	08	IRREGULAR 100
Roof Cover	11	SLATE 100
Interior Wall	05	DRYWALL 100
Interior Floo	11	CLAY TILE 100
Air Condition	03	CENTRAL 100
Heating Type	04	AIR DUCTED 100
Bedrooms		3 100
Bathrooms		3.5 100
Frame	02	WOOD FRAME 100
Stories	2.	2. 100
Units		0 100
Occupancy	00	NONE 100
Quality	03	Quality Level 03

DOR CODE 0100 SINGLE FAMILY
MAP NUM | MKT AREA 01
NEIGHBORHOOD/LOC 2104.00

AREA TYPE	TOTAL GROSS AREA	PCT OF BASE	TOT ADJ AREA	SUBAREA MARKET VALUE
BAS	1,468	100	1,468	299,686
FGR	264	55	145	29,601
FOP	135	30	40	8,166
FOP	152	30	46	9,390
FST	136	55	75	15,311
FST	210	55	116	23,681
FUS	967	100	967	197,408
STP	12	10	1	204
STP	18	10	2	409
STR	36	10	4	817
TOTALS	3,398		2,864	584,672

MARKET ADJUSTMENTS

TYPE	MDL	EFF. AREA	TOT ADJ PTS	EFF. BASE RATE	REPL. COST NEW	AYB	EYB	ECON	FNCT		NORM	% COND
0500	01	2,864	126.9000	209.38	599,664	2017	2017	0	0	0	2.50	97.50

1 SFR CUST – 100% - 2023 Heated Area: 2435 HX Base Yr 2023

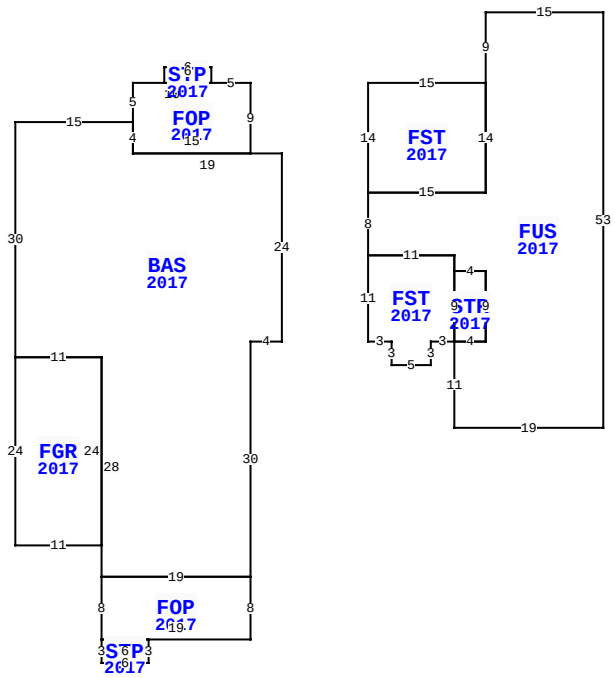

1981 AMELIA OAKS DR, FERNANDINA BEACH

BLD DATE		LGL DATE	
XF DATE		LAND DATE	04/23/2024 MLU
INC DATE		AG DATE	

NASSAU COUNTY PROPERTY

PAGE 1 of 1 2

VALUATION SUMMARY

VALUATION BY		STANDARD
Tax Group: 2	Tax Dist:	
BUILDING MARKET VALUE		584,672
TOTAL MARKET OB/XF VALUE		8,729
TOTAL LAND VALUE - MARKET		250,000
TOTAL MARKET VALUE		843,401
SOH/AGL Deduction		105,635
ASSESSED VALUE		737,766
TOTAL EXEMPTION VALUE	HX HB	50,000
BASE TAXABLE VALUE		687,766
TOTAL JUST VALUE		843,401
NCON VALUE		0
INCOME VALUE		
PREVIOUS YEAR MKT VALUE		716,278

PERMIT NUM	DESCRIPTION	AMT	ISSUED
20162322	CO ISSUED	0	11/28/2017
20162322	NEW CONSTR	295,836	08/23/2016

SALES DATA

OFF RECORD Number	DATE	TYPE INST	Q / U	V / I	RSN CD	SALE PRICE
2161/1519	12/04/2017	SW	Q	I	02	458,000

GRANTOR: D & H HOMES LLC
GRANTEE: PELLEGRINO FRANK P

BUILDING NOTES

BUILDING DIMENSIONS

FOP=[YR=2017] W5 STP=[YR=2017] N2 W6 S2 E6 $ W10 S5
BAS=[YR=2017] W15 S30 FGR=[YR=2017] S24 E11 N24 W11$ E11 S28
FOP=[YR=2017] S8 STP=[YR=2017] S3 E6 N3 W6$ E19 N8 W19$ E19
N30 E4 N24 W19 N4$ S4 E15 N9$ PTR=E15 FST=[YR=2017] E15
FUS=[YR=2017] N9 E15 S53 W19 N11 STR=[YR=2017] E4 N9 W4
FST=[YR=2017] N2 W11 S11 E3 S3 E5 N3 E3 N9$ S9$ E4 N9 W4 N2
W11 N8 E15 N14$ S14 W15 N14$ W15$.

EXTRA FEATURES

LN	OB/XF CODE	DESCRIPTION	BLD	CAP	L	W	UNITS	UT	Adj R	ADJ UNIT PRICE	ORIG COND	YEAR ON	YEAR ACTUAL	Q	% COND	OB/XF MKT VALUE	NOTES
1	0504	FP-ELECTRI	0	100	0	0	1.00	UT	2,000.00	2,000.00	100	2017	2017	3	98	1,960	
2	0855	CONC PAVER	0	100	0	0	315.00	SF	7.00	7.00	100	2017	2017	3	97	2,139	
3	0855	CONC PAVER	0	100	0	0	24.00	SF	7.00	7.00	100	2017	2017	3	97	163	
4	0855	CONC PAVER	0	100	0	0	583.00	SF	7.00	7.00	100	2017	2017	3	97	3,959	
5	0476	VF 6 SBPL	0	100	0	0	6.00	LF	32.00	32.00	100	2017	2017	3	92	177	
6	0479	VF PICKET	0	100	0	0	36.00	LF	10.00	10.00	100	2017	2017	3	92	331	

LAND DESCRIPTION

TOTAL OB/XF 8,729

LN	USE CODE	CLS	LAND USE DESCRIPTION	CAP	RD	LOC ZONE	FRONT	DEPTH	TOT LND UTS	UNIT TYPE	DT	DPTH FACT	% COND	TOT ADJ	UNIT PRICE	ADJ UNIT PRICE	LAND VALUE	OTHER ADJUSTMENTS AND NOTES	YEAR	DENSITY	DECL	FRZ	YR	CONSRV
1	000100	C	SFR	100		R-2	0.00	0.00	1.00	LT		1.00	1.00	1.00	250,000.00	250,000.00	250,000							

REVIEW DATE 06/03/2024 BY KBA Total Acres: 0.00 Total Land Value: 250,000 Market: 0 Agricultural: 0 Common: 250,000 PRINTED 08/06/2024 BY SYS