LOT 19
AMELIA OAKS PBK 8/85

GLEDHILL JOHN WEBBER & KAREN ABLE
1930 AMELIA OAKS DRIVE
FERNANDINA BEACH, FL 32034

2024

29-3N-28-0100-0019-0000

NASSAU COUNTY PROPERTY

BUILDING CHARACTERISTICS

ELEMENT	CD	CONSTRUCTION
Exterior Wall	10	ABOVE AVG 100
Roof Structur	08	IRREGULAR 100
Roof Cover	11	SLATE 100
Interior Wall	05	DRYWALL 100
Interior Floo	12	HARDWOOD 80
Interior Floo	11	CLAY TILE 20
Air Condition	03	CENTRAL 100
Heating Type	04	AIR DUCTED 100
Bedrooms		4 100
Bathrooms		3.5 100
Frame	02	WOOD FRAME 100
Stories	2.	2. 100
Units		0 100
Occupancy	00	NONE 100
Quality	03	Quality Level 03
DOR CODE	0100	SINGLE FAMILY
MAP NUM		MKT AREA 01
NEIGHBORHOOD/LOC	2104.00	

AREA TYPE	TOTAL GROSS AREA	PCT OF BASE	TOT ADJ AREA	SUBAREA MARKET VALUE
BAS	1,449	100	1,449	279,603
FGR	264	55	145	27,980
FOP	152	30	46	8,876
FSP	150	40	60	11,578
FST	210	55	116	22,384
FUS	1,099	100	1,099	212,065
STP	12	10	1	193
STP	18	10	2	386
STR	40	10	4	772
TOTALS	3,394		2,922	563,836

MARKET ADJUSTMENTS

TYPE	MDL	EFF. AREA	TOT ADJ PTS	EFF. BASE RATE	REPL. COST NEW	AYB	EYB	ECON	FNCT		NORM	% COND
0500	01	2,922	119.9440	197.91	578,293	2017	2017	0	0	0	2.50	97.50

1 SFR CUST – 100% - 2022 Heated Area: 2548 HX Base Yr 2022

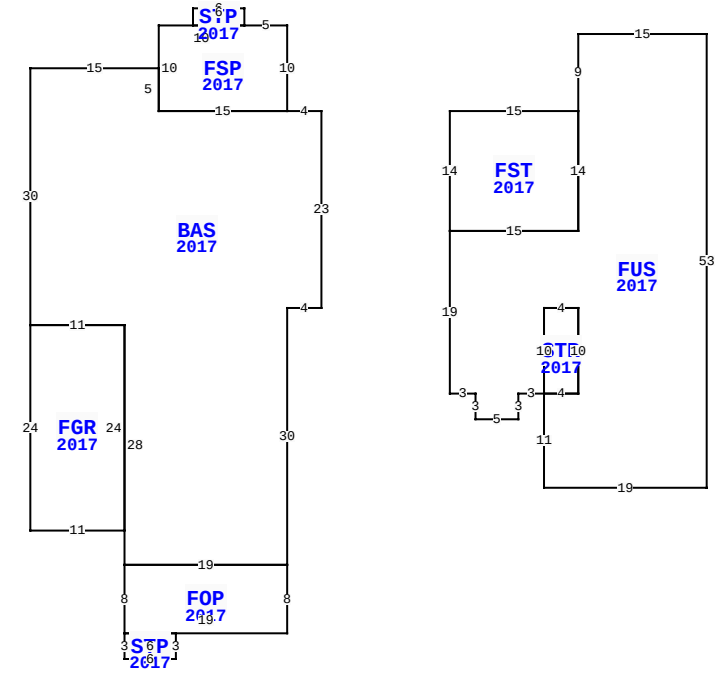

1930 AMELIA OAKS DR, FERNANDINA BEACH

BLD DATE		LGL DATE	
XF DATE		LAND DATE	04/23/2024 MLU
INC DATE		AG DATE	

VALUATION SUMMARY

VALUATION BY		STANDARD
Tax Group: 2	Tax Dist:	
BUILDING MARKET VALUE		563,836
TOTAL MARKET OB/XF VALUE		12,622
TOTAL LAND VALUE - MARKET		275,000
TOTAL MARKET VALUE		851,458
SOH/AGL Deduction		214,181
ASSESSED VALUE		637,277
TOTAL EXEMPTION VALUE	HX HB	50,000
BASE TAXABLE VALUE		587,277
TOTAL JUST VALUE		851,458
NCON VALUE		0
INCOME VALUE		
PREVIOUS YEAR MKT VALUE		690,639

PERMIT NUM	DESCRIPTION	AMT	ISSUED
20162028	CO ISSUED	0	11/28/2017
20162028	NEW CONSTR	294,967	07/27/2016

SALES DATA

OFF RECORD Number	DATE	TYPE INST	Q U /	V I /	RSN CD	SALE PRICE
2437/1919	3/01/2021	WD	Q	I	02	690,000
GRANTOR: MYNATT DWIGHT E & PAM						
GRANTEE: GLEDHILL JOHN WEBBE						
2165/0603	12/18/2017	SW	Q	I	01	469,600
GRANTOR: D & H HOMES LLC						
GRANTEE: MYNATT DWIGHT E & P						

BUILDING NOTES

EXTRA FEATURES

LN	OB/XF CODE	DESCRIPTION	BLD	CAP	L	W	UNITS	UT	Adj R	ADJ UNIT PRICE	ORIG COND	YEAR ON	YEAR ACTUAL	Q	% COND	OB/XF MKT VALUE	NOTES
1	0504	FP-ELECTRI	0	100	0	0	1.00	UT	2,000.00	2,000.00	100	2017	2017	3	98	1,960	
2	0855	CONC PAVER	0	100	0	0	234.00	SF	7.00	7.00	100	2017	2017	3	97	1,589	
3	0855	CONC PAVER	0	100	0	0	24.00	SF	7.00	7.00	100	2017	2017	3	97	163	
4	0855	CONC PAVER	0	100	0	0	900.00	SF	10.00	10.00	100	2024	2021		99	8,910	

BUILDING DIMENSIONS

BAS=[YR=2017;ORIG=0,0] W4 W15 N5 W15 S30 E11 S28 E19 N30 E4 N23 $
FUS=[YR=2017;ORIG=30,0] N9 E15 S53 W19 N11 E4 N10 W4 S10 W3 S3 W5 N3 W3 N19 E15 N14 $
FGR=[YR=2017;ORIG=-34,25] S24 E11 N24 W11 $
FST=[YR=2017;ORIG=15,0] E15 S14 W15 N14 $
FOP=[YR=2017;ORIG=-23,53] S8 E19 N8 W19 $
FSP=[YR=2017;ORIG=-4,0] N10 W5 W10 S10 E15 $
STR=[YR=2017;ORIG=26,33] N10 E4 S10 W4 $
STP=[YR=2017;ORIG=-23,61] S3 E6 N3 W6 $
STP=[YR=2017;ORIG=-9,-10] N2 W6 S2 E6 $
PTR=[ORIG=0,0] E15 W15 $

LAND DESCRIPTION

TOTAL OB/XF 12,622

LN	USE CODE	CLS	LAND USE DESCRIPTION	CAP	RD	LOC ZONE	FRONT	DEPTH	TOT LND UTS	UNIT TYPE	DT	DPTH FACT	% COND	TOT ADJ	UNIT PRICE	ADJ UNIT PRICE	LAND VALUE	OTHER ADJUSTMENTS AND NOTES	YEAR	DENSITY	DECL	FRZ	YR	CONSRV
1	000100	C	SFR	100		R-2	0.00	0.00	1.00	LT		1.00	1.00	1.10	250,000.00	275,000.00	275,000							

REVIEW DATE 06/03/2024 BY KBA Total Acres: 0.00 Total Land Value: 275,000 Market: 0 Agricultural: 0 Common: 275,000 PRINTED 08/06/2024 BY SYS