LOT 25
CONCOURSE CROSSING PHASE 1
OR 2554/1692

GILLIS ANNE
95118 GINA ST
FERNANDINA BEACH, FL 32034

2024

29-2N-28-0330-0025-0000

NASSAU COUNTY PROPERTY

BUILDING CHARACTERISTICS

ELEMENT	CD	CONSTRUCTION
Exterior Wall	31	HARDIE BRD 100
Roof Structur	03	GABLE/HIP 100
Roof Cover	03	COMP SHNGL 100
Interior Wall	05	DRYWALL 100
Interior Floo	13	LVT/LAMNT 50
Interior Floo	14	CARPET 50
Air Condition	03	CENTRAL 100
Heating Type	03	FORCED AIR 100
Bedrooms		4 100
Bathrooms		3 100
Frame	02	WOOD FRAME 100
Stories	2.	2. 100
Units		0 100
Quality	01	Quality Level 01
DOR CODE	0100	SINGLE FAMILY
MAP NUM		MKT AREA 04
NEIGHBORHOOD/LOC	4095.00	

AREA TYPE	TOTAL GROSS AREA	PCT OF BASE	TOT ADJ AREA	SUBAREA MARKET VALUE
BAS	1,895	100	1,895	223,079
FGR	380	55	209	24,603
FOP	196	30	59	6,945
FST	16	55	9	1,059
FUS	577	100	577	67,924
STR	56	10	6	706
TOTALS	3,120		2,755	324,319

MARKET ADJUSTMENTS

TYPE	MDL	EFF. AREA	TOT ADJ PTS	EFF. BASE RATE	REPL. COST NEW	AYB	EYB	ECON	FNCT		NORM	% COND
0900	01	2,755	94.1760	117.72	324,319	2023	2023	0	0	0	0.00	100.00

1 SNGL FAM – 0% - 2024 Heated Area: 2472 HX Base Yr

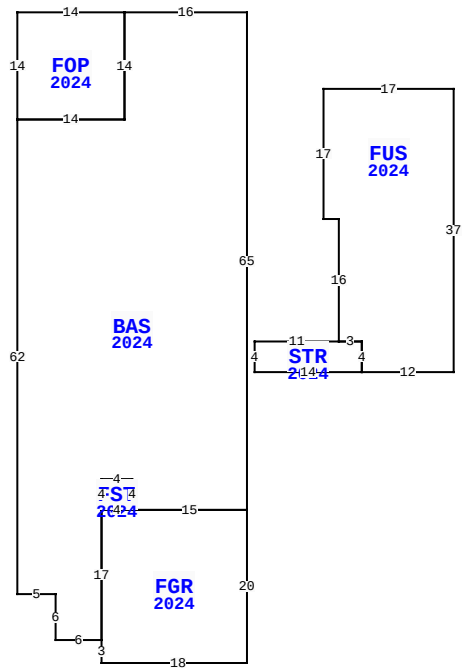

95118 GINA ST, FERNANDINA BEACH

BLD DATE		LGL DATE	
XF DATE		LAND DATE	05/15/2023 MLU
INC DATE		AG DATE	

VALUATION SUMMARY

VALUATION BY	STANDARD
Tax Group: 4	Tax Dist:
BUILDING MARKET VALUE	324,319
TOTAL MARKET OB/XF VALUE	3,869
TOTAL LAND VALUE - MARKET	60,000
TOTAL MARKET VALUE	388,188
SOH/AGL Deduction	0
ASSESSED VALUE	388,188
TOTAL EXEMPTION VALUE	0
BASE TAXABLE VALUE	388,188
TOTAL JUST VALUE	388,188
NCON VALUE	328,188
INCOME VALUE	
PREVIOUS YEAR MKT VALUE	60,000

PERMIT NUM	DESCRIPTION	AMT	ISSUED
23003132	NEW CONSTR	367,129	03/09/2023
220006216		367,129	

SALES DATA

OFF RECORD Number	DATE	TYPE INST	Q U /	V I /	RSN CD	SALE PRICE
2687/1669	12/21/2023	WD	Q	I	01	465,600

GRANTOR: CENTURY COMMUNITIES O

GRANTEE: GILLIS ANNE

BUILDING NOTES

BUILDING DIMENSIONS

BAS=[YR=2024;ORIG=50,0] W16 S14 W14 S62 E5 S6 E6 N17 N4 E4 S4 E15 N65 $
FOP=[YR=2024;ORIG=20,0] E14 S14 W14 N14 $
FST=[YR=2024;ORIG=31,61] E4 S4 W4 N4 $
FGR=[YR=2024;ORIG=50,65] W15 W4 S17 S3 E1 E18 N20 $
FUS=[YR=2024;ORIG=60,10] E17 S37 W12 N4 W3 N16 W2 N17 $
STR=[YR=2024;ORIG=51,43] S4 E14 N4 W3 W11 $
.

EXTRA FEATURES

LN	OB/XF CODE	DESCRIPTION	BLD	CAP	L	W	UNITS	UT	Adj R	ADJ UNIT PRICE	ORIG COND	YEAR ON	YEAR ACTUAL	Q	% COND	OB/XF MKT VALUE	NOTES
1	0811	CONCRETE B	0	0	0	0	744.00	SF	5.20	5.20	100	2024	2023		100	3,869	

LAND DESCRIPTION

TOTAL OB/XF 3,869

LN	USE CODE	CLS	LAND USE DESCRIPTION	CAP	RD	LOC ZONE	FRONT	DEPTH	TOT LND UTS	UNIT TYPE	DT	DPTH FACT	% COND	TOT ADJ	UNIT PRICE	ADJ UNIT PRICE	LAND VALUE	OTHER ADJUSTMENTS AND NOTES	YEAR	DENSITY	DECL	FRZ	YR	CONSRV
1	000134	C	SFR POND	0		PUD	0.00	0.00	1.00	LT		1.00	1.00	1.00	60,000.00	60,000.00	60,000							

REVIEW DATE 01/10/2024 BY DJ Total Acres: 0.00 Total Land Value: 60,000 Market: 0 Agricultural: 0 Common: 60,000 PRINTED 08/06/2024 BY SYS