UNIT 1 LOT F
CONCOURSE CROSSING PHASE 1
OR 2554/1692

WHITE CYNTHIA GRAHAM
95409 KATHERINE ST
FERNANDINA BEACH, FL 32034

2024

29-2N-28-0330-0001-00F0

BUILDING CHARACTERISTICS

ELEMENT	CD	CONSTRUCTION
Exterior Wall	31	HARDIE BRD 100
Roof Structur	03	GABLE/HIP 100
Roof Cover	03	COMP SHNGL 100
Roof Cover	12	MODULAR MT 0
Interior Wall	05	DRYWALL 100
Interior Floo	13	LVT/LAMNT 50
Interior Floo	14	CARPET 50
Air Condition	03	CENTRAL 100
Heating Type	04	AIR DUCTED 100
Bedrooms		3 100
Bathrooms		2.5 100
Frame	02	WOOD FRAME 100
Stories	2.	2. 100
Units		0 100
Quality	05	Quality Level 05
DOR CODE	0100	SINGLE FAMILY
MAP NUM		MKT AREA 04
NEIGHBORHOOD/LOC	4095.00	

AREA TYPE	TOTAL GROSS AREA	PCT OF BASE	TOT ADJ AREA	SUBAREA MARKET VALUE
BAS	752	100	752	85,487
FGR	285	55	157	17,848
FOP	25	30	8	909
FOP	144	30	43	4,888
FUS	1,072	100	1,072	121,865
STR	52	10	5	568
TOTALS	2,330		2,037	231,566

MARKET ADJUSTMENTS

TYPE	MDL	EFF. AREA	TOT ADJ PTS	EFF. BASE RATE	REPL. COST NEW	AYB	EYB	ECON	FNCT		NORM	% COND
0320	01	2,037	119.6580	113.68	231,566	2023	2023	0	0	0	0.00	100.00

1 TOWNHOUSE - 100% - 2024 Heated Area: 1824 HX Base Yr 2024

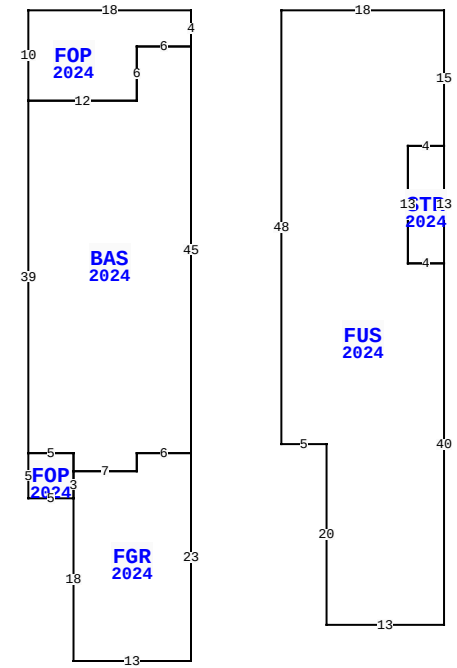

95409 KATHERINE ST, FERNANDINA BEACH

BLD DATE		LGL DATE	
XF DATE		LAND DATE	05/06/2022 DC
INC DATE		AG DATE	

NASSAU COUNTY PROPERTY

PAGE 1 of 1 4

VALUATION SUMMARY

VALUATION BY		STANDARD
Tax Group: 4	Tax Dist:	
BUILDING MARKET VALUE		231,566
TOTAL MARKET OB/XF VALUE		2,477
TOTAL LAND VALUE - MARKET		25,000
TOTAL MARKET VALUE		259,043
SOH/AGL Deduction		0
ASSESSED VALUE		259,043
TOTAL EXEMPTION VALUE	HX HB	50,000
BASE TAXABLE VALUE		209,043
TOTAL JUST VALUE		259,043
NCON VALUE		234,043
INCOME VALUE		
PREVIOUS YEAR MKT VALUE		25,000

PERMIT NUM	DESCRIPTION	AMT	ISSUED
22017985	NEW CONSTR	322,377	12/07/2022
220004856		322,377	

SALES DATA

OFF RECORD Number	DATE	TYPE INST	Q U	V I	RSN CD	SALE PRICE
2688/427	12/28/2023	WD	Q	I	02	300,000

GRANTOR: CENTURY COMMUNITIES O

GRANTEE: WHITE CYNTHIA GRAHA

BUILDING NOTES

BUILDING DIMENSIONS

BAS=[YR=2024;ORIG=70,10] W6 S6 W12 S39 E5 S2 E7 N2 E6 N45 $
FOP=[YR=2024;ORIG=70,6] W18 S10 E12 N6 E6 N4 $
FGR=[YR=2024;ORIG=57,57] E7 N2 E6 S23 W13 N18 N3 $
FOP=[YR=2024;ORIG=52,55] E5 S2 S3 W5 N5 $
FUS=[YR=2024;ORIG=80,6] E18 S15 W4 S13 E4 S40 W13 N20 W5 N48 $
STR=[YR=2024;ORIG=98,21] W4 S13 E4 N13 $
.

EXTRA FEATURES

LN	OB/XF CODE	DESCRIPTION	BLD	CAP	L	W	UNITS	UT	Adj R	ADJ UNIT PRICE	ORIG COND	YEAR ON	YEAR ACTUAL	Q	% COND	OB/XF MKT VALUE	NOTES
1	0810	CONCRETE A	0	100	0	0	381.00	SF	6.50	6.50	100	2024	2023		100	2,477	

LAND DESCRIPTION

TOTAL OB/XF 2,477

LN	USE CODE	CLS	LAND USE DESCRIPTION	CAP	RD	LOC ZONE	FRONT	DEPTH	TOT LND UTS	UNIT TYPE	DT	DPTH FACT	% COND	TOT ADJ	UNIT PRICE	ADJ UNIT PRICE	LAND VALUE	OTHER ADJUSTMENTS AND NOTES	YEAR	DENSITY	DECL	FRZ	YR	CONSRV
1	000100	C	SFR	100		PUD	0.00	0.00	1.00	LT		1.00	1.00	1.00	25,000.00	25,000.00	25,000							

REVIEW DATE 01/10/2024 BY DJ Total Acres: 0.00 Total Land Value: 25,000 Market: 0 Agricultural: 0 Common: 25,000 PRINTED 08/06/2024 BY SYS