UNIT 1 LOT E
CONCOURSE CROSSING PHASE 1
OR 2554/1692

CARTER CALEB WREN
95417 KATHERINE ST
FERNANDINA BEACH, FL 32034

**2024**

**29-2N-28-0330-0001-00E0**

## BUILDING CHARACTERISTICS

| ELEMENT | CD | CONSTRUCTION |
|---|---|---|
| Exterior Wall | 31 | HARDIE BRD 100 |
| Roof Structur | 03 | GABLE/HIP 100 |
| Roof Cover | 03 | COMP SHNGL 80 |
| Roof Cover | 12 | MODULAR MT 20 |
| Interior Wall | 05 | DRYWALL 100 |
| Interior Floo | 13 | LVT/LAMNT 50 |
| Interior Floo | 14 | CARPET 50 |
| Air Condition | 03 | CENTRAL 100 |
| Heating Type | 04 | AIR DUCTED 100 |
| Bedrooms | | 3 100 |
| Bathrooms | | 2.5 100 |
| Frame | 02 | WOOD FRAME 100 |
| Stories | 2. | 2. 100 |
| Units | | 0 100 |
| Quality | 05 | Quality Level 05 |
| DOR CODE | 0100 | SINGLE FAMILY |
| MAP NUM | | MKT AREA 04 |
| NEIGHBORHOOD/LOC | 4095.00 | |

| AREA TYPE | TOTAL GROSS AREA | PCT OF BASE | TOT ADJ AREA | SUBAREA MARKET VALUE |
|---|---|---|---|---|
| BAS | 752 | 100 | 752 | 85,638 |
| FGR | 285 | 55 | 157 | 17,879 |
| FOP | 25 | 30 | 8 | 911 |
| FOP | 144 | 30 | 43 | 4,897 |
| FUS | 1,072 | 100 | 1,072 | 122,079 |
| STR | 52 | 10 | 5 | 569 |
| TOTALS | 2,330 | | 2,037 | 231,974 |

## MARKET ADJUSTMENTS

| TYPE | MDL | EFF. AREA | TOT ADJ PTS | EFF. BASE RATE | REPL. COST NEW | AYB | EYB | ECON | FNCT | | NORM | % COND |
|---|---|---|---|---|---|---|---|---|---|---|---|---|
| 0320 | 01 | 2,037 | 119.8736 | 113.88 | 231,974 | 2023 | 2023 | 0 | 0 | 0 | 0.00 | 100.00 |

1 TOWNHOUSE - 0% - 2024 Heated Area: 1824 HX Base Yr

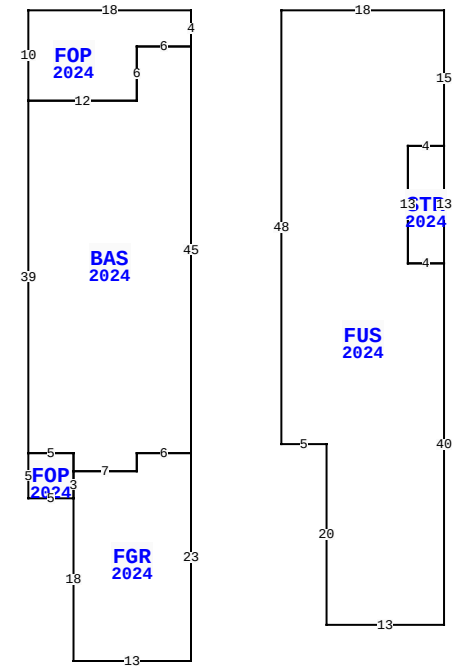


| | | | |
|---|---|---|---|
| BLD DATE | | LGL DATE | |
| XF DATE | | LAND DATE | 05/06/2022 DC |
| INC DATE | | AG DATE | |

95417 KATHERINE ST, FERNANDINA BEACH

## NASSAU COUNTY PROPERTY

PAGE 1 of 1 4

### VALUATION SUMMARY

| | |
|---|---|
| VALUATION BY | STANDARD |
| Tax Group: 4 | Tax Dist: |
| BUILDING MARKET VALUE | 231,974 |
| TOTAL MARKET OB/XF VALUE | 2,633 |
| TOTAL LAND VALUE - MARKET | 25,000 |
| TOTAL MARKET VALUE | 259,607 |
| SOH/AGL Deduction | 0 |
| ASSESSED VALUE | 259,607 |
| TOTAL EXEMPTION VALUE | 0 |
| BASE TAXABLE VALUE | 259,607 |
| TOTAL JUST VALUE | 259,607 |
| NCON VALUE | 234,607 |
| INCOME VALUE | |
| PREVIOUS YEAR MKT VALUE | 25,000 |

| PERMIT NUM | DESCRIPTION | AMT | ISSUED |
|---|---|---|---|
| 22018908 | NEW CONSTR | 322,377 | 12/29/2022 |
| 220004896 | | 322,377 | |

## SALES DATA

| OFF RECORD Number | DATE | TYPE INST | Q U | V I | RSN CD | SALE PRICE |
|---|---|---|---|---|---|---|
| 2688/1946 | 12/28/2023 | WD | Q | I | 01 | 289,000 |

GRANTOR: CENTURY COMMUNITIES O

GRANTEE: CARTER CALEB WREN

## BUILDING NOTES

## BUILDING DIMENSIONS

BAS=[YR=2024;ORIG=70,10] W6 S6 W12 S39 E5 S2 E7 N2 E6 N45 $
FOP=[YR=2024;ORIG=70,6] W18 S10 E12 N6 E6 N4 $
FGR=[YR=2024;ORIG=57,57] E7 N2 E6 S23 W13 N18 N3 $
FOP=[YR=2024;ORIG=52,55] E5 S2 S3 W5 N5 $
FUS=[YR=2024;ORIG=80,6] E18 S15 W4 S13 E4 S40 W13 N20 W5 N48 $
STR=[YR=2024;ORIG=98,21] W4 S13 E4 N13 $
.

## EXTRA FEATURES

| LN | OB/XF CODE | DESCRIPTION | BLD | CAP | L | W | UNITS | UT | Adj R | ADJ UNIT PRICE | ORIG COND | YEAR ON | YEAR ACTUAL | Q | % COND | OB/XF MKT VALUE | NOTES |
|---|---|---|---|---|---|---|---|---|---|---|---|---|---|---|---|---|---|
| 1 | 0810 | CONCRETE A | 0 | 0 | 0 | 0 | 405.00 | SF | 6.50 | 6.50 | 100 | 2024 | 2023 | | 100 | 2,633 | |

## LAND DESCRIPTION

TOTAL OB/XF 2,633

| LN | USE CODE | CLS | LAND USE DESCRIPTION | CAP | RD | LOC ZONE | FRONT | DEPTH | TOT LND UTS | UNIT TYPE | DT | DPTH FACT | % COND | TOT ADJ | UNIT PRICE | ADJ UNIT PRICE | LAND VALUE | OTHER ADJUSTMENTS AND NOTES | YEAR | DENSITY | DECL | FRZ | YR | CONSRV |
|---|---|---|---|---|---|---|---|---|---|---|---|---|---|---|---|---|---|---|---|---|---|---|---|---|
| 1 | 000100 | C | SFR | 0 | | PUD | 0.00 | 0.00 | 1.00 | LT | | 1.00 | 1.00 | 1.00 | 25,000.00 | 25,000.00 | 25,000 | | | | | | | |

REVIEW DATE 01/10/2024 BY DJ Total Acres: 0.00 Total Land Value: 25,000 Market: 0 Agricultural: 0 Common: 25,000 PRINTED 08/06/2024 BY SYS