UNIT 1 LOT B
CONCOURSE CROSSING PHASE 1
OR 2554/1692

LARSEN DOUGLAS RICHARD/FURLOW ADRIENNE DENNYS
85441 KATHERINE ST
FERNANDINA BEACH, FL 32034

2024

29-2N-28-0330-0001-00B0

NASSAU COUNTY PROPERTY

BUILDING CHARACTERISTICS

ELEMENT	CD	CONSTRUCTION
Exterior Wall	31	HARDIE BRD 100
Roof Structur	03	GABLE/HIP 100
Roof Cover	03	COMP SHNGL 80
Roof Cover	12	MODULAR MT 20
Interior Wall	05	DRYWALL 100
Interior Floo	13	LVT/LAMNT 50
Interior Floo	14	CARPET 50
Air Condition	03	CENTRAL 100
Heating Type	04	AIR DUCTED 100
Bedrooms		3 100
Bathrooms		2.5 100
Frame	02	WOOD FRAME 100
Stories	2.	2. 100
Units		0 100
Quality	05	Quality Level 05
DOR CODE	0100	SINGLE FAMILY
MAP NUM		MKT AREA 04
NEIGHBORHOOD/LOC	4095.00	

AREA TYPE	TOTAL GROSS AREA	PCT OF BASE	TOT ADJ AREA	SUBAREA MARKET VALUE
BAS	752	100	752	85,638
FGR	285	55	157	17,879
FOP	25	30	8	911
FOP	144	30	43	4,897
FUS	1,072	100	1,072	122,079
STR	52	10	5	569
TOTALS	2,330		2,037	231,974

MARKET ADJUSTMENTS

TYPE	MDL	EFF. AREA	TOT ADJ PTS	EFF. BASE RATE	REPL. COST NEW	AYB	EYB	ECON	FNCT		NORM	% COND
0320	01	2,037	119.8736	113.88	231,974	2023	2023	0	0	0	0.00	100.00

1 TOWNHOUSE - 0% - 2024 Heated Area: 1824 HX Base Yr

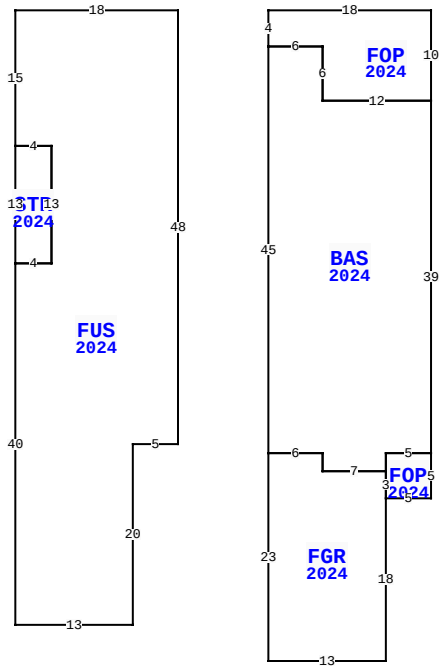

95441 KATHERINE ST, FERNANDINA BEACH

BLD DATE		LGL DATE	
XF DATE		LAND DATE	05/06/2022 DC
INC DATE		AG DATE	

VALUATION SUMMARY

VALUATION BY	STANDARD
Tax Group: 4	Tax Dist:
BUILDING MARKET VALUE	231,974
TOTAL MARKET OB/XF VALUE	2,477
TOTAL LAND VALUE - MARKET	25,000
TOTAL MARKET VALUE	259,451
SOH/AGL Deduction	0
ASSESSED VALUE	259,451
TOTAL EXEMPTION VALUE	0
BASE TAXABLE VALUE	259,451
TOTAL JUST VALUE	259,451
NCON VALUE	234,451
INCOME VALUE	
PREVIOUS YEAR MKT VALUE	25,000

PERMIT NUM	DESCRIPTION	AMT	ISSUED
22017983	NEW CONSTR	322,377	12/07/2022
220004863		322,377	

SALES DATA

OFF RECORD Number	DATE	TYPE INST	Q / U	V / I	RSN CD	SALE PRICE
2688/173	12/28/2023	WD	Q	I	01	295,000

GRANTOR: CENTURY COMMUNITIES O

GRANTEE: LARSEN DOUGLAS RICH

BUILDING NOTES

EXTRA FEATURES

LN	OB/XF CODE	DESCRIPTION	BLD	CAP	L	W	UNITS	UT	Adj R	ADJ UNIT PRICE	ORIG COND	YEAR ON	YEAR ACTUAL	Q	% COND	OB/XF MKT VALUE	NOTES
1	0810	CONCRETE A	0	0	0	0	381.00	SF	6.50	6.50	100	2024	2023		100	2,477	

BUILDING DIMENSIONS

FUS=[YR=2024;ORIG=70,6] W18 S15 E4 S13 W4 S40 E13 N20 E5 N48 $
BAS=[YR=2024;ORIG=80,10] E6 S6 E12 S39 W5 S2 W7 N2 W6 N45 $
FGR=[YR=2024;ORIG=93,57] W7 N2 W6 S23 E13 N18 N3 $
FOP=[YR=2024;ORIG=80,6] E18 S10 W12 N6 W6 N4 $
STR=[YR=2024;ORIG=52,21] E4 S13 W4 N13 $
FOP=[YR=2024;ORIG=98,55] W5 S2 S3 E5 N5 $
.

LAND DESCRIPTION

TOTAL OB/XF 2,477

LN	USE CODE	CLS	LAND USE DESCRIPTION	CAP	RD	LOC ZONE	FRONT	DEPTH	TOT LND UTS	UNIT TYPE	DT	DPTH FACT	% COND	TOT ADJ	UNIT PRICE	ADJ UNIT PRICE	LAND VALUE	OTHER ADJUSTMENTS AND NOTES	YEAR	DENSITY	DECL	FRZ	YR	CONSRV
1	000100	C	SFR	0		PUD	0.00	0.00	1.00	LT		1.00	1.00	1.00	25,000.00	25,000.00	25,000							

REVIEW DATE 01/10/2024 BY DJ Total Acres: 0.00 Total Land Value: 25,000 Market: 0 Agricultural: 0 Common: 25,000 PRINTED 08/06/2024 BY SYS