LOT 84
IN OR 2199/1349
HARBOR CONCOURSE PHASE 1

KITTRELL WILLIAM W II &/CAPULE ELVINE J
97386 HARBOR CONCOURSE CIRCLE
FERNANDINA BEACH, FL 32034

2024

29-2N-28-0115-0084-0000

BUILDING CHARACTERISTICS

ELEMENT	CD	CONSTRUCTION
Exterior Wall	31	HARDIE BRD 100
Roof Structur	03	GABLE/HIP 100
Roof Cover	03	COMP SHNGL 100
Interior Wall	05	DRYWALL 100
Interior Floo	11	CLAY TILE 50
Interior Floo	14	CARPET 50
Air Condition	03	CENTRAL 100
Heating Type	04	AIR DUCTED 100
Bedrooms		3 100
Bathrooms		2.5 100
Frame	02	WOOD FRAME 100
Stories	2.	2. 100
Units		0 100
Occupancy	00	NONE 100
Quality	04	Quality Level 04

DOR CODE 0100 SINGLE FAMILY
MAP NUM | MKT AREA 04
NEIGHBORHOOD/LOC 4145.00

AREA TYPE	TOTAL GROSS AREA	PCT OF BASE	TOT ADJ AREA	SUBAREA MARKET VALUE
BAS	1,136	100	1,136	121,448
FGR	631	55	347	37,098
FOP	63	30	19	2,031
FOP	320	30	96	10,263
FUS	1,166	100	1,166	124,656
STR	40	10	4	428
TOTALS	3,356		2,768	295,923

MARKET ADJUSTMENTS

TYPE	MDL	EFF. AREA	TOT ADJ PTS	EFF. BASE RATE	REPL. COST NEW	AYB	EYB	ECON	FNCT		NORM	% COND
0100	01	2,768	115.4160	109.65	303,511	2017	2017	0	0	0	2.50	97.50

1 SINGLE FAM – 100% - 2019 Heated Area: 2302 HX Base Yr 2019

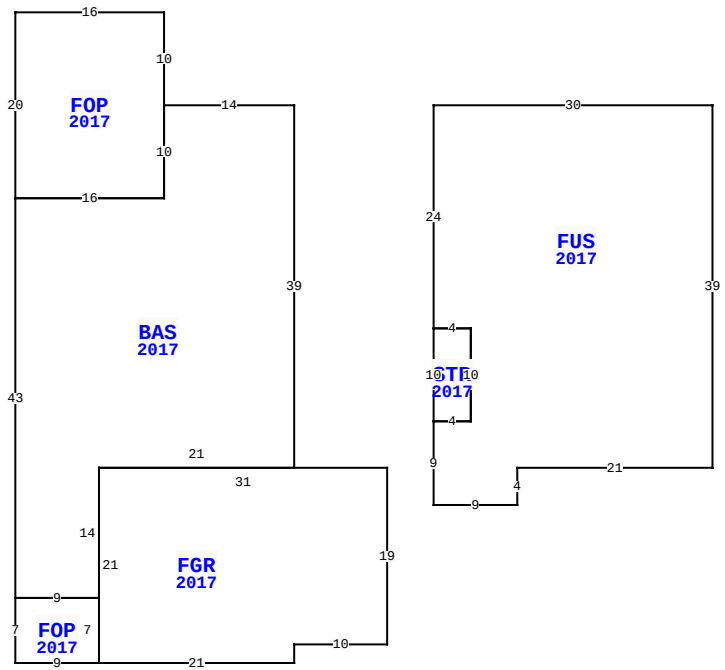

BLD DATE	03/30/2023	NW	LGL DATE
XF DATE			LAND DATE
INC DATE			AG DATE

97386 HARBOR CONCOURSE CIR, FERNANDINA BEACH

NASSAU COUNTY PROPERTY

PAGE 1 of 1 4

VALUATION SUMMARY

VALUATION BY		STANDARD
Tax Group: 4	Tax Dist:	
BUILDING MARKET VALUE		295,923
TOTAL MARKET OB/XF VALUE		11,180
TOTAL LAND VALUE - MARKET		75,000
TOTAL MARKET VALUE		382,103
SOH/AGL Deduction		117,905
ASSESSED VALUE		264,198
TOTAL EXEMPTION VALUE	HX HB	50,000
BASE TAXABLE VALUE		214,198
TOTAL JUST VALUE		382,103
NCON VALUE		0
INCOME VALUE		
PREVIOUS YEAR MKT VALUE		368,873

PERMIT NUM	DESCRIPTION	AMT	ISSUED
18005422	CO ISSUED	0	05/30/2018
B1633049	NEW CONSTR	296,492	09/01/2016

SALES DATA

OFF RECORD Number	DATE	TYPE INST	Q U	V I	RSN CD	SALE PRICE
2199/1349	5/30/2018	WD	Q	I	01	279,800
GRANTOR: DREAM FINDERS HOMES L						
GRANTEE: KITTRELL WILLIAM W						
2062/1494	7/28/2016	WD	Q	V	05	500,000
GRANTOR: NASSAU CONCOURSE LLC						
GRANTEE: DREAM FINDERS HOMES						

BUILDING NOTES

BUILDING DIMENSIONS

BAS=[YR=2017] W14 FOP=[YR=2017] N10 W16 S20 E16 N10$ S10 W16 S43 FOP=[YR=2017] S7 E9 FGR=[YR=2017] E21 N2 E10 N19 W31 S21$ N7 W9$ E9 N14 E21 N39$ PTR=E15 FUS=[YR=2017] E30 S39 W21 S4 W9 N9 STR=[YR=2017] N10 E4 S10 W4$ E4 N10 W4 N24$ W15$.

EXTRA FEATURES

LN	OB/XF CODE	DESCRIPTION	BLD	CAP	L	W	UNITS	UT	Adj R	ADJ UNIT PRICE	ORIG COND	YEAR ON	YEAR ACTUAL	Q	% COND	OB/XF MKT VALUE	NOTES
1	0811	CONCRETE B	0	100	0	0	856.00	SF	5.20	5.20	100	2017	2017	3	97	4,318	
2	0810	CONCRETE A	0	100	0	0	36.00	SF	6.50	6.50	100	2017	2017	3	97	227	
3	0476	VF 6 SBPL	0	100	0	0	216.00	LF	32.00	32.00	100	2017	2017	3	92	6,359	
4	0470	VNYL GATE	0	100	0	0	1.00	UT	300.00	300.00	100	2017	2017	3	92	276	

LAND DESCRIPTION

TOTAL OB/XF 11,180

LN	USE CODE	CLS	LAND USE DESCRIPTION	CAP	RD	LOC ZONE	FRONT	DEPTH	TOT LND UTS	UNIT TYPE	DT	DPTH FACT	% COND	TOT ADJ	UNIT PRICE	ADJ UNIT PRICE	LAND VALUE	OTHER ADJUSTMENTS AND NOTES	YEAR	DENSITY	DECL	FRZ	YR	CONSRV
1	000100	C	SFR	100		PUD	0.00	0.00	1.00	LT		1.00	1.00	1.00	75,000.00	75,000.00	75,000							

REVIEW DATE 07/09/2024 BY KBA Total Acres: 0.00 Total Land Value: 75,000 Market: 0 Agricultural: 0 Common: 75,000 PRINTED 08/06/2024 BY SYS