BLOCK 3 S'LY 79.97 FT OF LOT 2
IN OR 2163/450
WILSON & OGILVIE SUB DB B9/500

FLEMING URBAN C IV & JACQUELYN
45167 FOURTH AV
CALLAHAN, FL 32011

2024

29-2N-25-3220-0003-0023

NASSAU COUNTY PROPERTY

BUILDING CHARACTERISTICS

ELEMENT	CD	CONSTRUCTION
Exterior Wall	31	HARDIE BRD 100
Roof Structur	08	IRREGULAR 100
Roof Cover	03	COMP SHNGL 100
Interior Wall	05	DRYWALL 100
Interior Floo	13	LVT/LAMNT 50
Interior Floo	14	CARPET 50
Air Condition	03	CENTRAL 100
Heating Type	04	AIR DUCTED 100
Bedrooms		3 100
Bathrooms		2.5 100
Frame	02	WOOD FRAME 100
Stories	2.	2. 100
Units		0 100
Occupancy	00	NONE 100
Quality	03	Quality Level 03
DOR CODE	0100	SINGLE FAMILY
MAP NUM		MKT AREA 07
NEIGHBORHOOD/LOC	7001.00	

AREA TYPE	TOTAL GROSS AREA	PCT OF BASE	TOT ADJ AREA	SUBAREA MARKET VALUE
BAL	128	15	19	2,362
BAS	1,403	100	1,403	174,421
FGR	518	55	285	35,431
FOP	121	30	36	4,475
FOP	124	30	37	4,600
FUS	678	100	678	84,289
TOTALS	2,972		2,458	305,578

MARKET ADJUSTMENTS

TYPE	MDL	EFF. AREA	TOT ADJ PTS	EFF. BASE RATE	REPL. COST NEW	AYB	EYB	ECON	FNCT		NORM	% COND
0900	01	2,458	107.5200	134.40	330,355	2007	2007	0	0	0	7.50	92.50

1 SNGL FAM – 100% - 2019 Heated Area: 2081 HX Base Yr 2019

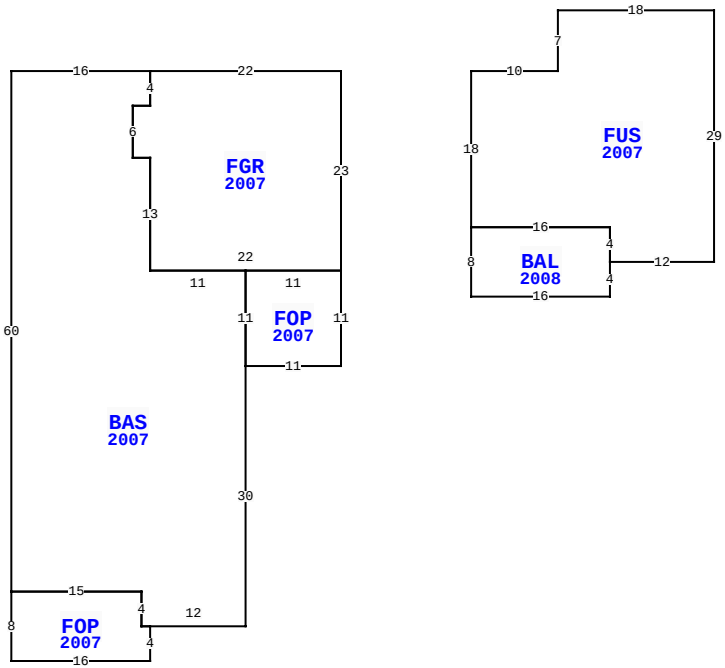

45167 FOURTH AV, CALLAHAN

BLD DATE		LGL DATE	
XF DATE		LAND DATE	06/02/2023 MLU
INC DATE		AG DATE	

VALUATION SUMMARY

VALUATION BY		STANDARD
Tax Group: 1	Tax Dist:	
BUILDING MARKET VALUE		433,056
TOTAL MARKET OB/XF VALUE		14,006
TOTAL LAND VALUE - MARKET		55,300
TOTAL MARKET VALUE		502,362
SOH/AGL Deduction		189,003
ASSESSED VALUE		313,359
TOTAL EXEMPTION VALUE	HX HB	50,000
BASE TAXABLE VALUE		263,359
TOTAL JUST VALUE		502,362
NCON VALUE		0
INCOME VALUE		
PREVIOUS YEAR MKT VALUE		467,420

PERMIT NUM	DESCRIPTION	AMT	ISSUED

SALES DATA

OFF RECORD Number	DATE	TYPE INST	Q / U	V / I	RSN CD	SALE PRICE
2163/0450	12/08/2017	WD	Q	I	01	300,000
GRANTOR: HOLLOWAY LIVING TRUST						
GRANTEE: FLEMING URBAN C IV						
1689/0886	6/23/2010	WD	U	I	30	100
GRANTOR: HOLLOWAY CECIL R & LE						
GRANTEE: HOLLOWAY CECIL R JR						

BUILDING NOTES

BUILDING DIMENSIONS

FGR=[YR=2007] W22 BAS=[YR=2007] W16 S60 FOP=[YR=2007] S8 E16 N4 W1 N4 W15$ E15 S4 E12 N30 FOP=[YR=2007] E11 N11 W11 S11$ N11 W11 N13 W2 N6 E2 N4$S4 W2 S6 E2 S13 E22 N23$ PTR=E15 FUS=[YR=2007] E10 N7 E18 S29 W12 BAL=[YR=2008] S4 W16 N8 E16 S4$ N4 W16 N18$ W15$.

EXTRA FEATURES

LN	OB/XF CODE	DESCRIPTION	BLD	CAP	L	W	UNITS	UT	Adj R	ADJ UNIT PRICE	ORIG COND	YEAR ON	YEAR ACTUAL	Q	% COND	OB/XF MKT VALUE	NOTES
1	0812	CONCRETE C	0	100	0	0	3,253.00	SF	4.00	4.00	100	2007	2007	3	88	11,451	
2	0825	BRICK	0	100	22	2	44.00	SF	12.50	12.50	100	2007	2007	3	97	534	
3	0462	ST/AL FNC	0	100	0	0	376.00	SF	10.00	10.00	100	2007	2007	3	48	1,805	
4	0463	FENCE GATE	0	100	0	0	1.00	UT	300.00	300.00	100	2007	2007	3	72	216	

LAND DESCRIPTION

TOTAL OB/XF 14,006

LN	USE CODE	CLS	LAND USE DESCRIPTION	CAP	RD	LOC ZONE	FRONT	DEPTH	TOT LND UTS	UNIT TYPE	DT	DPTH FACT	% COND	TOT ADJ	UNIT PRICE	ADJ UNIT PRICE	LAND VALUE	OTHER ADJUSTMENTS AND NOTES	YEAR	DENSITY	DECL	FRZ	YR	CONSRV
1	000000	C	VAC RES	100		RL	79.00	210.00	79.00	FF		1.00	1.00	1.00	700.00	700.00	55,300							

REVIEW DATE 05/12/2019 BY KBA Total Acres: 0.00 Total Land Value: 55,300 Market: 0 Agricultural: 0 Common: 55,300 PRINTED 08/06/2024 BY SYS

BLOCK 3 S'LY 79.97 FT OF LOT 2
IN OR 2163/450
WILSON & OGILVIE SUB DB B9/500

FLEMING URBAN C IV & JACQUELYN
45167 FOURTH AV
CALLAHAN, FL 32011

2024

29-2N-25-3220-0003-0023

BUILDING CHARACTERISTICS

ELEMENT	CD	CONSTRUCTION
Exterior Wall	10	ABOVE AVG 100
Roof Structur	03	GABLE/HIP 100
Roof Cover	03	COMP SHNGL 100
Interior Wall	05	DRYWALL 100
Interior Floo	03	CONC FINSH 50
Interior Floo	13	LVT/LAMNT 50
Air Condition	03	CENTRAL 100
Heating Type	04	AIR DUCTED 100
Bedrooms		1 100
Bathrooms		1 100
Frame	02	WOOD FRAME 100
Stories	2.	2. 100
Units		0 100
Occupancy	00	NONE 100
Quality	05	Quality Level 05
DOR CODE	0100	SINGLE FAMILY
MAP NUM		MKT AREA 07
NEIGHBORHOOD/LOC	7001.00	

AREA TYPE	TOTAL GROSS AREA	PCT OF BASE	TOT ADJ AREA	SUBAREA MARKET VALUE
BAL	66	15	10	1,106
BAS	720	100	720	79,674
FGR	720	55	396	43,820
FOP	66	30	20	2,214
STR	56	10	6	664
TOTALS	1,628		1,152	127,478

MARKET ADJUSTMENTS

TYPE	MDL	EFF. AREA	TOT ADJ PTS	EFF. BASE RATE	REPL. COST NEW	AYB	EYB	ECON	FNCT		NORM	% COND
0100	01	1,152	125.9280	119.63	137,814	2007	2007	0	0	0	7.50	92.50

2 SINGLE FAM – 100% - 2019 Heated Area: 720 HX Base Yr 2019

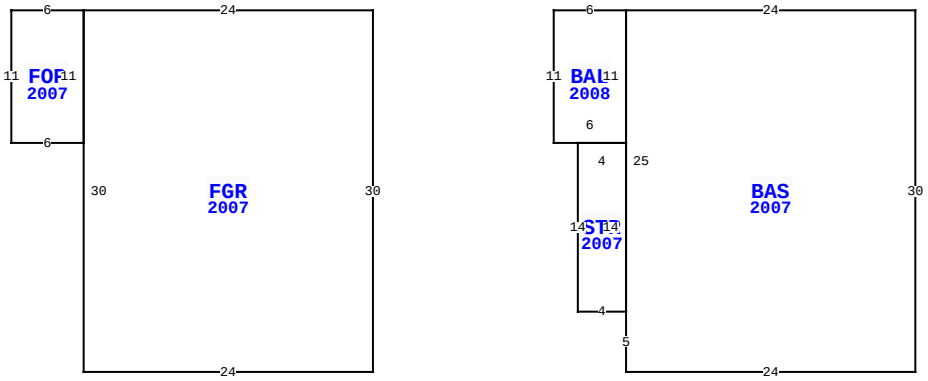

45167 FOURTH AV, CALLAHAN

BLD DATE		LGL DATE	
XF DATE		LAND DATE	06/02/2023 MLU
INC DATE		AG DATE	

NASSAU COUNTY PROPERTY

PAGE 2 of 2 1

VALUATION SUMMARY

VALUATION BY		STANDARD
Tax Group: 1	Tax Dist:	
BUILDING MARKET VALUE		433,056
TOTAL MARKET OB/XF VALUE		14,006
TOTAL LAND VALUE - MARKET		55,300
TOTAL MARKET VALUE		502,362
SOH/AGL Deduction		189,003
ASSESSED VALUE		313,359
TOTAL EXEMPTION VALUE	HX HB	50,000
BASE TAXABLE VALUE		263,359
TOTAL JUST VALUE		502,362
NCON VALUE		0
INCOME VALUE		
PREVIOUS YEAR MKT VALUE		467,420

PERMIT NUM	DESCRIPTION	AMT	ISSUED

SALES DATA

OFF RECORD Number	DATE	TYPE INST	Q / U	V / I	RSN CD	SALE PRICE
2163/0450	12/08/2017	WD	Q	I	01	300,000
GRANTOR: HOLLOWAY LIVING TRUST						
GRANTEE: FLEMING URBAN C IV						
1689/0886	6/23/2010	WD	U	I	30	100
GRANTOR: HOLLOWAY CECIL R & LE						
GRANTEE: HOLLOWAY CECIL R JR						

BUILDING NOTES

BUILDING DIMENSIONS

FGR=[YR=2007] W24 FOP=[YR=2007] W6 S11 E6 N11$ S30 E24 N30$
PTR=E15 BAL=[YR=2008] E6 BAS=[YR=2007] E24 S30 W24 N5
STR=[YR=2007] W4 N14 E4 S14$ N25$ S11 W6 N11$ W15$.

EXTRA FEATURES

LN	OB/XF CODE	DESCRIPTION	BLD	CAP	L	W	UNITS	UT	Adj R	ADJ UNIT PRICE	ORIG COND	YEAR ON	YEAR ACTUAL	Q	% COND	OB/XF MKT VALUE	NOTES

LAND DESCRIPTION

TOTAL OB/XF 0

LN	USE CODE	CLS	LAND USE DESCRIPTION	CAP	RD	LOC ZONE	FRONT	DEPTH	TOT LND UTS	UNIT TYPE	DT	DPTH FACT	% COND	TOT ADJ	UNIT PRICE	ADJ UNIT PRICE	LAND VALUE	OTHER ADJUSTMENTS AND NOTES	YEAR	DENSITY	DECL	FRZ	YR	CONSRV

REVIEW DATE 05/12/2019 BY KBA Total Acres: 0.00 Total Land Value: 55,300 Market: 0 Agricultural: 0 Common: 55,300 PRINTED 08/06/2024 BY SYS