PT OF LOTS 7 & 8 & PT GOVT
LOT 6 IN OR 2715/277 BEING PARCE
H E PICKETTS SUB PBK O/7

SUKHOVITSKY VICTOR/MOSQUERA JENNIFER ET AL
21 DOGE PROMENADE
LINDENHURST, NY 11757

2024

29-2N-25-0000-0057-0000

NASSAU COUNTY PROPERTY

BUILDING CHARACTERISTICS

ELEMENT	CD	CONSTRUCTION
Exterior Wall	05	AVERAGE 100
Roof Structur	03	GABLE/HIP 100
Roof Cover	03	COMP SHNGL 100
Interior Wall	05	DRYWALL 100
Interior Floo	13	LVT/LAMNT 50
Interior Floo	14	CARPET 50
Air Condition	03	CENTRAL 100
Heating Type	04	AIR DUCTED 100
Bedrooms		3 100
Bathrooms		2 100
Frame	02	WOOD FRAME 100
Stories	1.	1. 100
Units		0 100
BUD8 Adjustme	06	DIST 1D 100
Occupancy	00	NONE 100
Quality	06	Quality Level 06
DOR CODE	5000	IMPROVED AG
MAP NUM		MKT AREA 08
NEIGHBORHOOD/LOC	8026.00	

AREA TYPE	TOTAL GROSS AREA	PCT OF BASE	TOT ADJ AREA	SUBAREA MARKET VALUE
BAS	64	100	64	6,196
BAS	1,106	100	1,106	107,064
BAS	126	100	126	12,198
BAS	230	100	230	22,265
BAS	270	100	270	26,137
FOP	90	30	27	2,614
FOP	154	30	46	4,453
STP	8	10	1	97
UOP	120	20	24	2,323
UST	30	45	14	1,355
TOTALS	2,198		1,908	184,700

MARKET ADJUSTMENTS

TYPE	MDL	EFF. AREA	TOT ADJ PTS	EFF. BASE RATE	REPL. COST NEW	AYB	EYB	ECON	FNCT		NORM	% COND
0100	01	1,908	120.5890	114.56	218,580	1925	1990	0	0	0	15.50	84.50

1 SINGLE FAM – 100% - 1997 Heated Area: 1796 HX Base Yr 1997

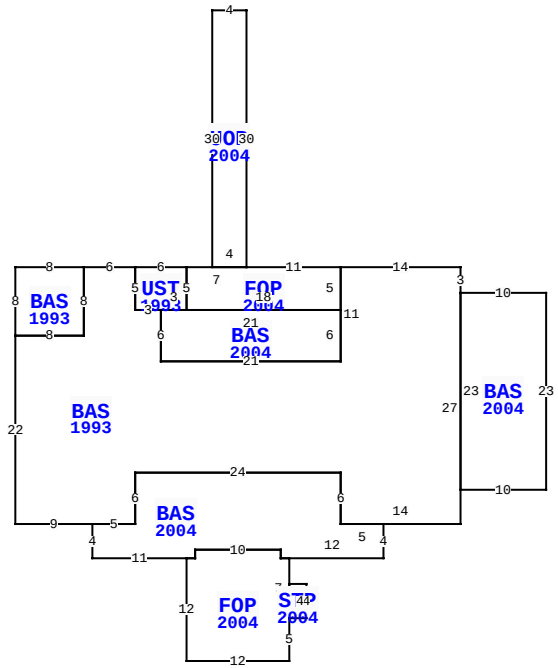

542284 LEM TURNER RD, CALLAHAN

BLD DATE		LGL DATE	
XF DATE		LAND DATE	05/19/2023 MLU
INC DATE		AG DATE	

NASSAU COUNTY PROPERTY — VALUATION SUMMARY

VALUATION BY		STANDARD
Tax Group: 6	Tax Dist:	
BUILDING MARKET VALUE		340,623
TOTAL MARKET OB/XF VALUE		28,873
TOTAL LAND VALUE - MARKET		124,000
TOTAL MARKET VALUE		440,606
SOH/AGL Deduction		248,561
ASSESSED VALUE		192,045
TOTAL EXEMPTION VALUE	HX HB WX	55,000
BASE TAXABLE VALUE		137,045
TOTAL JUST VALUE		493,496
NCON VALUE		0
INCOME VALUE		
PREVIOUS YEAR MKT VALUE		478,396

PERMIT NUM	DESCRIPTION	AMT	ISSUED
8664	REPAIR/RRF	10,520	02/10/1993
7210	XFOB	5,800	05/07/1991

SALES DATA

OFF RECORD Number	DATE	TYPE INST	Q / U	V / I	RSN CD	SALE PRICE
2715/277	6/07/2024	WD	Q	I	05	800,000
GRANTOR: COFFEY SANDRA R L/E						
GRANTEE: SUKHOVITSKY VICTOR						
2184/0537	3/16/2018	WD	U	I	11	100
GRANTOR: COFFEY SANDRA R						
GRANTEE: COFFEY SANDRA R L/E						

BUILDING NOTES

BUILDING DIMENSIONS

BAS=[YR=2004] W10 BAS=[YR=1993] N3 W14 FOP=[YR=2004] W11 UOP=[YR=2004] N30 W4 S30 E4 $ W7 UST=[YR=1993] W6 S5 E3 BAS=[YR=2004] S6 E21 N6 W21 $ E3 N5 $ S5 E18 N5 $ S11 W21 N6 W3 N5 W6 BAS=[YR=1993] W8 S8 E8 N8 $ S8 W8 S22 E9 BAS=[YR=2004] S4 E11 FOP=[YR=2004] S12 E12 N5 STP=[YR=2004] E2 N4 W2 S4 $ N7 W1 N1 W10 S1 W1 $ E1 N1 E10 S1 E12 N4 W5 N6 W24 S6 W5 $ E5 N6 E24 S6 E14 N27 $ S23 E10 N23 $.

EXTRA FEATURES

LN	OB/XF CODE	DESCRIPTION	BLD	CAP	L	W	UNITS	UT	Adj R	ADJ UNIT PRICE	ORIG COND	YEAR ON	YEAR ACTUAL	Q	% COND	OB/XF MKT VALUE	NOTES
1	0510	GARAGE WD-	0	100	22	28	616.00	SF	35.00	35.00	100	1993	1993	3	20	4,312	
2	0812	CONCRETE C	0	100	0	0	1,750.00	SF	4.00	4.00	100	1990	1990	3	59.5	4,165	
3	0510	GARAGE WD-	0	100	20	16	320.00	SF	35.00	35.00	100	1991	1991	3	20	2,240	
4	0510	GARAGE WD-	0	100	15	16	240.00	SF	35.00	35.00	100	2001	2001	3	29	2,436	
5	0350	CARPORT WD	0	100	62	19	1,178.00	SF	13.00	13.00	100	1998	1998	3	20	3,063	
6	0350	CARPORT WD	0	100	36	21	756.00	SF	13.00	13.00	100	2001	2001	3	20	1,966	
7	0812	CONCRETE C	0	100	0	0	1,851.00	SF	4.00	4.00	100	2002	2002	3	82	6,071	
8	0855	CONC PAVER	0	100	65	2	130.00	SF	7.50	7.50	100	2004	2004	3	84	819	
9	0810	CONCRETE A	0	100	0	0	680.00	SF	6.50	6.50	100	2005	2005	3	86	3,801	

LAND DESCRIPTION

TOTAL OB/XF 28,873

LN	USE CODE	CLS	LAND USE DESCRIPTION	CAP	RD	LOC ZONE	FRONT	DEPTH	TOT LND UTS	UNIT TYPE	DT	DPTH FACT	% COND	TOT ADJ	UNIT PRICE	ADJ UNIT PRICE	LAND VALUE	OTHER ADJUSTMENTS AND NOTES	YEAR	DENSITY	DECL	FRZ	YR	CONSRV
1	005000	C	RURAL HOME	100	0004	OR	0.00	0.00	2.00	AC		1.00	1.00	1.00	35,000.00	35,000.00	70,000							
2	006000	A	PAST1/HAY	0		OR			3.00	AC		1.00	1.00	1.00	370.00	370.00	1,110							
3	009910	M	MKT.VAL.AG	0		OR			3.00	AC		1.00	1.00	1.00	18,000.00	18,000.00	54,000							

REVIEW DATE 06/05/2020 BY KBA Total Acres: 5.00 Total Land Value: 71,110 Market: 54,000 Agricultural: 1,110 Common: 70,000 PRINTED 08/06/2024 BY SYS

PT OF LOTS 7 & 8 & PT GOVT
LOT 6 IN OR 2715/277 BEING PARCE
H E PICKETTS SUB PBK O/7

SUKHOVITSKY VICTOR/MOSQUERA JENNIFER ET AL
21 DOGE PROMENADE
LINDENHURST, NY 11757

2024

29-2N-25-0000-0057-0000

NASSAU COUNTY PROPERTY

BUILDING CHARACTERISTICS

ELEMENT	CD	CONSTRUCTION
Exterior Wall	05	AVERAGE 60
Exterior Wall	08	WD ON PLY 40
Roof Structur	02	SHED 100
Roof Cover	01	MINIMUM 100
Interior Wall	05	DRYWALL 100
Interior Floo	11	CLAY TILE 100
Air Condition	03	CENTRAL 100
Heating Type	04	AIR DUCTED 100
Bedrooms		2 100
Bathrooms		2 100
Frame	02	WOOD FRAME 100
Stories	1.	1. 100
Units		0 100
Occupancy	00	NONE 100
Quality	06	Quality Level 06
DOR CODE	5000	IMPROVED AG
MAP NUM		MKT AREA 08
NEIGHBORHOOD/LOC	8026.00	

AREA TYPE	TOTAL GROSS AREA	PCT OF BASE	TOT ADJ AREA	SUBAREA MARKET VALUE
BAS	1,264	100	1,264	138,794
SFB	160	80	128	14,055
UOP	138	20	28	3,075
TOTALS	1,562		1,420	155,923

MARKET ADJUSTMENTS

TYPE	MDL	EFF. AREA	TOT ADJ PTS	EFF. BASE RATE	REPL. COST NEW	AYB	EYB	ECON	FNCT		NORM	% COND
0100	01	1,420	132.0200	125.42	178,096	2002	2002	0	0	0	12.45	87.55

2 SINGLE FAM – 100% - 1997 Heated Area: 1392 HX Base Yr 1997

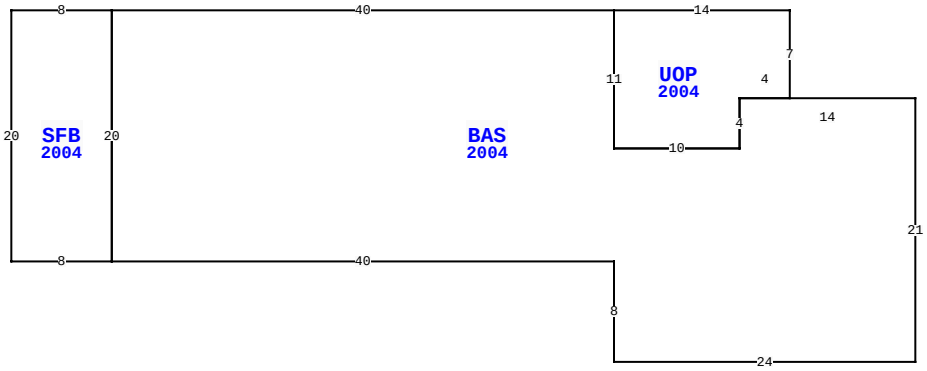

542284 LEM TURNER RD, CALLAHAN

BLD DATE		LGL DATE	
XF DATE		LAND DATE	05/19/2023 MLU
INC DATE		AG DATE	

VALUATION SUMMARY

VALUATION BY		STANDARD
Tax Group: 6	Tax Dist:	
BUILDING MARKET VALUE		340,623
TOTAL MARKET OB/XF VALUE		28,873
TOTAL LAND VALUE - MARKET		124,000
TOTAL MARKET VALUE		440,606
SOH/AGL Deduction		248,561
ASSESSED VALUE		192,045
TOTAL EXEMPTION VALUE	HX HB WX	55,000
BASE TAXABLE VALUE		137,045
TOTAL JUST VALUE		493,496
NCON VALUE		0
INCOME VALUE		
PREVIOUS YEAR MKT VALUE		478,396

PERMIT NUM	DESCRIPTION	AMT	ISSUED

SALES DATA

OFF RECORD Number	DATE	TYPE INST	Q / U	V / I	RSN CD	SALE PRICE
2715/277	6/07/2024	WD	Q	I	05	800,000
GRANTOR: COFFEY SANDRA R L/E						
GRANTEE: SUKHOVITSKY VICTOR						
2184/0537	3/16/2018	WD	U	I	11	100
GRANTOR: COFFEY SANDRA R						
GRANTEE: COFFEY SANDRA R L/E						

BUILDING NOTES

BUILDING DIMENSIONS

SFB=[YR=2004] E8 BAS=[YR=2004] E40 UOP=[YR=2004] E14 S7 W4 S4 W10 N11 $ S11 E10 N4 E14 S21 W24 N8 W40 N20 $ S20 W8 N20 $.

EXTRA FEATURES

L N	OB/XF CODE	DESCRIPTION	BLD	CAP	L	W	UNITS	UT	Adj R	ADJ UNIT PRICE	ORIG COND	YEAR ON	YEAR ACTUAL	Q	% COND	OB/XF MKT VALUE	NOTES

LAND DESCRIPTION

TOTAL OB/XF 0

L N	USE CODE	CLS	LAND USE DESCRIPTION	CAP	R D	LOC ZONE	FRONT	DEPTH	TOT LND UTS	UNIT TYPE	D T	DPTH FACT	% COND	TOT ADJ	UNIT PRICE	ADJ UNIT PRICE	LAND VALUE	OTHER ADJUSTMENTS AND NOTES	YEAR	DENSITY	DECL	FRZ	YR	CONSRV

REVIEW DATE 06/05/2020 BY KBA Total Acres: 5.00 Total Land Value: 71,110 Market: 54,000 Agricultural: 1,110 Common: 70,000 PRINTED 08/06/2024 BY SYS