PT NW1/4 OF SEC 29-2N-25E IN
OR 2022/1470
(EX PT IN OR 2005-697)

COOK FAMILY SHOPPING CENTER LLC/
PO BOX 87
CALLAHAN, FL 32011-0087

2024

29-2N-25-0000-0046-0000

BUILDING CHARACTERISTICS

ELEMENT	CD	CONSTRUCTION
Exterior Wall	15	CONC BLOCK 50
Exterior Wall	20	FACE BRICK 50
Roof Structur	09	RIDGE FRME 100
Roof Cover	04	BUILT-UP 90
Roof Cover	10	WD SHINGLE 10
Interior Wall	05	DRYWALL 100
Interior Floo	14	CARPET 60
Interior Floo	07	CORK/VTILE 40
Ceiling	01	FIN.SUSPD 100
Air Condition	03	CENTRAL 100
Heating Type	04	AIR DUCTED 100
Fixtures		17 100
Frame	03	MASONRY 100
Story Height		12 100
RMS		11 100
Stories	1.	1. 100
Units		0 100
BUD8 Adjustme	01	DIST CA 100
Quality	00	QUALITY Level 01
Occupancy	00	100

DOR CODE	1600	COMMUNITY SHOPPING	
MAP NUM		MKT AREA	07
NEIGHBORHOOD/LOC	7002.00		

AREA TYPE	TOTAL GROSS AREA	PCT OF BASE	TOT ADJ AREA	SUBAREA MARKET VALUE
BAS	4,968	100	4,968	104,726
CAN	1,050	30	315	6,640
FST	432	50	216	4,553
TOTALS	6,450		5,499	115,919

MARKET ADJUSTMENTS

TYPE	MDL	EFF. AREA	TOT ADJ PTS	EFF. BASE RATE	REPL. COST NEW	AYB	EYB	ECON	FNCT	AP	NORM	% COND
1602	04	5,499	79.1775	84.32	463,676	1977	1977	20	0	5	50.00	25.00

1 NBHD SHOP – 0% - 0 Heated Area: 4968 HX Base Yr

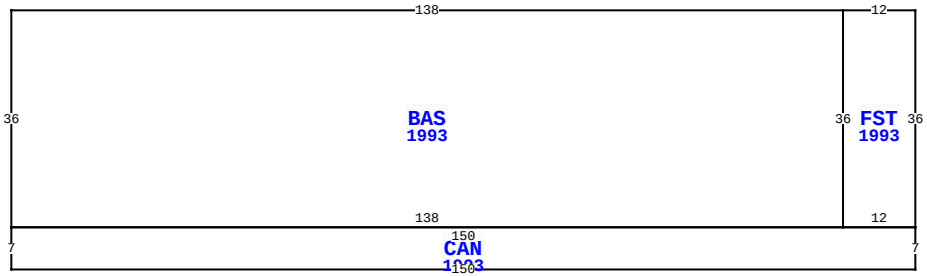

450018 SR 200, CALLAHAN

BLD DATE	11/07/2022	HS	LGL DATE		
XF DATE	09/22/2020	KK	LAND DATE	09/22/2020	KK
INC DATE			AG DATE		

NASSAU COUNTY PROPERTY

PAGE 1 of 3 1

VALUATION SUMMARY

VALUATION BY	STANDARD
Tax Group: 1	Tax Dist:
BUILDING MARKET VALUE	391,326
TOTAL MARKET OB/XF VALUE	393
TOTAL LAND VALUE - MARKET	854,640
TOTAL MARKET VALUE	1,246,359
SOH/AGL Deduction	280,172
ASSESSED VALUE	966,187
TOTAL EXEMPTION VALUE	0
BASE TAXABLE VALUE	966,187
TOTAL JUST VALUE	1,246,359
NCON VALUE	0
INCOME VALUE	756,361
PREVIOUS YEAR MKT VALUE	1,268,426

PERMIT NUM	DESCRIPTION	AMT	ISSUED
P2551	NEW CONSTR	0	12/13/2002
B2515	SIGN	0	07/01/2002
2307	SIGN	70	10/10/2000
2305	SIGN	600	10/05/2000
2306	CHNGE SRVC	10,000	10/04/2000
2301	SIGN	300	10/03/2000

SALES DATA

OFF RECORD Number	DATE	TYPE INST	Q / U	V / I	RSN CD	SALE PRICE
2022/1470	12/03/2015	SW	U	I	11	100
GRANTOR: 1995 COOK LIMITED PAR						
GRANTEE: COOK FAMILY SHOPPIN						
2005/0699	9/21/2015	QC	U	I	11	100
GRANTOR: CALLAHAN TIMBER COMPA						
GRANTEE: 1995 COOK LIMITED P						

BUILDING NOTES

BUILDING DIMENSIONS

BAS=[YR=1993] W138 S36 CAN=[YR=1993] S7 E150 N7
FST=[YR=1993] N36 W12 S36 E12$ W150$ E138 N36$.

EXTRA FEATURES

LN	OB/XF CODE	DESCRIPTION	BLD	CAP	L	W	UNITS	UT	Adj R	ADJ UNIT PRICE	ORIG COND	YEAR ON	YEAR ACTUAL	Q	% COND	OB/XF MKT VALUE	NOTES
1	0803	ASPHALT C	0	0	0	0	10,380.00	SF	2.00	2.00	0.25	1990	1990	3	0.25	52	
2	0402	CONC BUMPE	0	0	0	0	7.00	UT	25.00	25.00	0.25	1980	1980	3	0.25	0	
3	0978	SECURTY LT	0	0	0	0	3.00	UT	450.00	450.00	0.25	1980	1980	3	0.25	3	
4	0810	CONCRETE A	0	0	150	1	150.00	SF	6.50	6.50	0.25	1980	1980	3	0.25	2	
5	4950	BOLLARD	0	0	0	0	11.00	UT	100.00	100.00	0.25	2000	2000	3	0.25	3	
6	6001	ROLLUP DR	0	0	0	0	3.00	UT	400.00	400.00	0.25	2000	2000	3	0.25	3	
7	0812	CONCRETE C	0	0	0	0	31,065.00	SF	4.00	4.00	0.25	1985	1985	3	0.25	311	
8	0801	ASPHALT A	0	0	0	0	160.00	SF	3.00	3.00	0.25	1985	1985	3	0.25	1	
9	4950	BOLLARD	0	0	0	0	6.00	UT	100.00	100.00	0.25	1985	1985	3	0.25	2	
10	0978	SECURTY LT	0	0	0	0	5.00	UT	450.00	450.00	0.25	1985	1985	3	0.25	6	

TOTAL OB/XF 383

LAND DESCRIPTION

LN	USE CODE	CLS	LAND USE DESCRIPTION	CAP	RD	LOC ZONE	FRONT	DEPTH	TOT LND UTS	UNIT TYPE	DT	DPTH FACT	% COND	TOT ADJ	UNIT PRICE	ADJ UNIT PRICE	LAND VALUE	OTHER ADJUSTMENTS AND NOTES	YEAR	DENSITY	DECL	FRZ	YR	CONSRV
1	001610	C	SH CTR NHD	0	0004	CH	187.00	120.00	142,440.00	SF		1.00	1.00	0.75	8.00	6.00	854,640							

REVIEW DATE 06/16/2023 BY REA Total Acres: 0.00 Total Land Value: 854,640 Market: 0 Agricultural: 0 Common: 854,640 PRINTED 08/06/2024 BY SYS

PT NW1/4 OF SEC 29-2N-25E IN
OR 2022/1470
(EX PT IN OR 2005-697)

COOK FAMILY SHOPPING CENTER LLC/
PO BOX 87
CALLAHAN, FL 32011-0087

2024

29-2N-25-0000-0046-0000

BUILDING CHARACTERISTICS

ELEMENT	CD	CONSTRUCTION
Exterior Wall	15	CONC BLOCK 50
Exterior Wall	20	FACE BRICK 50
Roof Structur	09	RIDGE FRME 100
Roof Cover	04	BUILT-UP 90
Roof Cover	10	WD SHINGLE 10
Interior Wall	05	DRYWALL 100
Interior Floo	14	CARPET 60
Interior Floo	05	ASPH TILE 40
Ceiling	01	FIN.SUSPD 100
Air Condition	03	CENTRAL 100
Heating Type	04	AIR DUCTED 100
Fixtures		28 100
Frame	03	MASONRY 100
Story Height		11 100
RMS		28 100
Stories	1.	1. 100
Units		0 100
BUD8 Adjustme	01	DIST CA 100
Quality	00	QUALITY Level 01
Occupancy	00	100

DOR CODE	1600	COMMUNITY SHOPPING	
MAP NUM		MKT AREA	07
NEIGHBORHOOD/LOC	7002.00		

AREA TYPE	TOTAL GROSS AREA	PCT OF BASE	TOT ADJ AREA	SUBAREA MARKET VALUE
BAS	9,601	100	9,601	237,302
CAN	567	30	170	4,202
CAN	630	30	189	4,671
UST	121	40	48	1,186
UST	192	40	77	1,903
UST	90	40	36	890
TOTALS	11,201		10,121	250,155

MARKET ADJUSTMENTS

TYPE	MDL	EFF. AREA	TOT ADJ PTS	EFF. BASE RATE	REPL. COST NEW	AYB	EYB	ECON	FNCT	AP	NORM	% COND
1602	04	10,121	71.9580	76.64	775,673	1985	1985	20	0	5	42.75	32.25

5 NBHD SHOP - 0% - 0 Heated Area: 9601 HX Base Yr

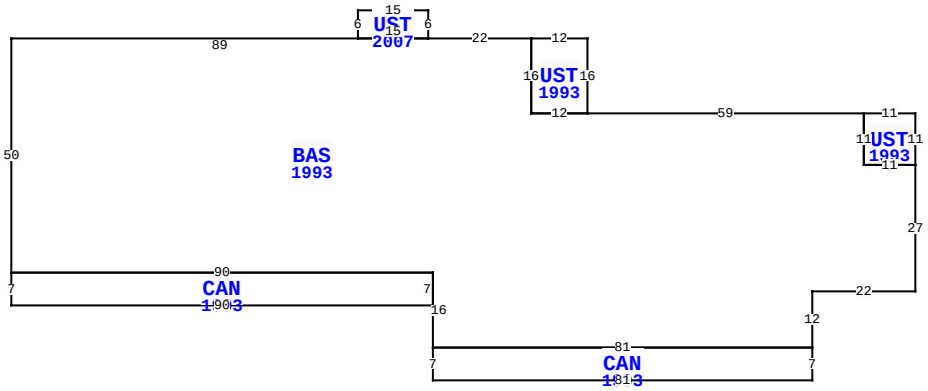

BLD DATE	11/07/2022	HS	LGL DATE
XF DATE	09/22/2020	KK	LAND DATE 09/22/2020 KK
INC DATE			AG DATE

450018 SR 200, CALLAHAN

NASSAU COUNTY PROPERTY

PAGE 2 of 3 1

VALUATION SUMMARY

VALUATION BY	STANDARD
Tax Group: 1	Tax Dist:
BUILDING MARKET VALUE	391,326
TOTAL MARKET OB/XF VALUE	393
TOTAL LAND VALUE - MARKET	854,640
TOTAL MARKET VALUE	1,246,359
SOH/AGL Deduction	280,172
ASSESSED VALUE	966,187
TOTAL EXEMPTION VALUE	0
BASE TAXABLE VALUE	966,187
TOTAL JUST VALUE	1,246,359
NCON VALUE	0
INCOME VALUE	756,361
PREVIOUS YEAR MKT VALUE	1,268,426

PERMIT NUM	DESCRIPTION	AMT	ISSUED
2296	REMODEL	0	09/19/2000
2293	SIGN	150	09/15/2000
2284	SIGN	80	08/23/2000
2343	REMODEL	15	12/01/1989
2341	REMODEL	29	11/30/1989
2242	NEW CONSTR	40,000	09/23/1988

SALES DATA

OFF RECORD Number	DATE	TYPE INST	Q / U	V / I	RSN CD	SALE PRICE
2022/1470	12/03/2015	SW	U	I	11	100
GRANTOR: 1995 COOK LIMITED PAR						
GRANTEE: COOK FAMILY SHOPPIN						
2005/0699	9/21/2015	QC	U	I	11	100
GRANTOR: CALLAHAN TIMBER COMPA						
GRANTEE: 1995 COOK LIMITED P						

BUILDING NOTES

BUILDING DIMENSIONS

BAS=[YR=1993] W59 UST=[YR=1993] N16 W12 S16 E12$ W12 N16 W22 UST=[YR=2007] N6 W15 S6 E15$ W89 S50 CAN=[YR=1993] S7 E90 N7 W90$ E90 S16 CAN=[YR=1993] S7 E81 N7 W81$ E81 N12 E22 N27 UST=[YR=1993] N11 W11 S11 E11$ W11 N11$.

EXTRA FEATURES

LN	OB/XF CODE	DESCRIPTION	BLD	CAP	L	W	UNITS	UT	Adj R	ADJ UNIT PRICE	ORIG COND	YEAR ON	YEAR ACTUAL	Q	% COND	OB/XF MKT VALUE	NOTES
11	0810	CONCRETE A	0	0	0	0	637.00	SF	6.50	6.50	0.25	1985	1985	3	0.25	10	

LAND DESCRIPTION

TOTAL OB/XF 10

LN	USE CODE	CLS	LAND USE DESCRIPTION	CAP	RD	LOC ZONE	FRONT	DEPTH	TOT LND UTS	UNIT TYPE	DT	DPTH FACT	% COND	TOT ADJ	UNIT PRICE	ADJ UNIT PRICE	LAND VALUE	OTHER ADJUSTMENTS AND NOTES	YEAR	DENSITY	DECL	FRZ	YR	CONSRV

REVIEW DATE 06/16/2023 BY REA Total Acres: 0.00 Total Land Value: 854,640 Market: 0 Agricultural: 0 Common: 854,640 PRINTED 08/06/2024 BY SYS

PT NW1/4 OF SEC 29-2N-25E IN
OR 2022/1470
(EX PT IN OR 2005-697)

COOK FAMILY SHOPPING CENTER LLC/
PO BOX 87
CALLAHAN, FL 32011-0087

2024

29-2N-25-0000-0046-0000

BUILDING CHARACTERISTICS

ELEMENT	CD	CONSTRUCTION
Exterior Wall	15	CONC BLOCK 100
Roof Structur	13	P-STRESS C 100
Roof Cover	04	BUILT-UP 100
Interior Wall	01	MINIMUM 100
Interior Floo	03	CONC FINSH 100
Ceiling	03	PART.FIN. 100
Air Condition	01	NONE 100
Heating Type	01	NONE 100
Plumbing		1 100
Frame	03	MASONRY 100
Story Height		8 100
RMS		25 100
Stories	1.	1. 100
Class	00	. 100
Units		0 100
BUD8 Adjustme	01	DIST CA 100
Occupancy	00	NONE 100
Quality	01	Quality Level 01

DOR CODE	1600	COMMUNITY SHOPPING	
MAP NUM		MKT AREA	07
NEIGHBORHOOD/LOC	7002.00		

AREA TYPE	TOTAL GROSS AREA	PCT OF BASE	TOT ADJ AREA	SUBAREA MARKET VALUE
BAS	3,000	100	3,000	25,253
TOTALS	3,000		3,000	25,252

MARKET ADJUSTMENTS

TYPE	MDL	EFF. AREA	TOT ADJ PTS	EFF. BASE RATE	REPL. COST NEW	AYB	EYB	ECON	FNCT		NORM	% COND
4804	06	3,000	65.5578	25.90	77,700	1985	1985	20	0	0	47.50	32.50

6 MINI WAREH – 0% - 0 Heated Area: 3000 HX Base Yr

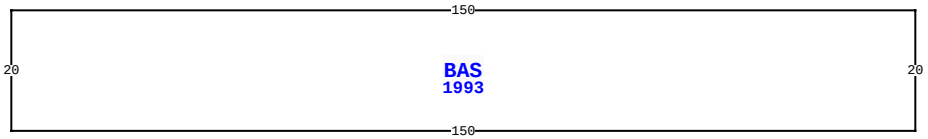

450018 SR 200, CALLAHAN

BLD DATE	11/07/2022	HS	LGL DATE	
XF DATE	09/22/2020	KK	LAND DATE	09/22/2020 KK
INC DATE			AG DATE	

EXTRA FEATURES

L N	OB/XF CODE	DESCRIPTION	BLD	CAP	L	W	UNITS	UT	Adj R	ADJ UNIT PRICE	ORIG COND	YEAR ON	YEAR ACTUAL	Q	% COND	OB/XF MKT VALUE	NOTES

NASSAU COUNTY PROPERTY

PAGE 3 of 3 1

VALUATION SUMMARY

VALUATION BY	STANDARD
Tax Group: 1	Tax Dist:
BUILDING MARKET VALUE	391,326
TOTAL MARKET OB/XF VALUE	393
TOTAL LAND VALUE - MARKET	854,640
TOTAL MARKET VALUE	1,246,359
SOH/AGL Deduction	280,172
ASSESSED VALUE	966,187
TOTAL EXEMPTION VALUE	0
BASE TAXABLE VALUE	966,187
TOTAL JUST VALUE	1,246,359
NCON VALUE	0
INCOME VALUE	756,361
PREVIOUS YEAR MKT VALUE	1,268,426

PERMIT NUM	DESCRIPTION	AMT	ISSUED

SALES DATA

OFF RECORD Number	DATE	TYPE INST	Q U /	V I /	RSN CD	SALE PRICE
2022/1470	12/03/2015	SW	U	I	11	100
GRANTOR: 1995 COOK LIMITED PAR						
GRANTEE: COOK FAMILY SHOPPIN						
2005/0699	9/21/2015	QC	U	I	11	100
GRANTOR: CALLAHAN TIMBER COMPA						
GRANTEE: 1995 COOK LIMITED P						

BUILDING NOTES

BUILDING DIMENSIONS

BAS=[YR=1993] W150 S20 E150 N20$.

LAND DESCRIPTION

TOTAL OB/XF 0

L N	USE CODE	CLS	LAND USE DESCRIPTION	CAP	R D	LOC ZONE	FRONT	DEPTH	TOT LND UTS	UNIT TYPE	D T	DPTH FACT	% COND	TOT ADJ	UNIT PRICE	ADJ UNIT PRICE	LAND VALUE	OTHER ADJUSTMENTS AND NOTES	YEAR	DENSITY	DECL	FRZ	YR	CONSRV

REVIEW DATE 06/16/2023 BY REA Total Acres: 0.00 Total Land Value: 854,640 Market: 0 Agricultural: 0 Common: 854,640 PRINTED 08/06/2024 BY SYS