PARCELS 3-6 & 3-14
W165 FT OF E1320 FT OF N1/2 OF
NW1/4 & N263.70 FT OF W165FT

LOVE CRAIG & ANNA
7649 MOTES RD
BRYCEVILLE, FL 32009

2024

29-1S-24-0000-0003-0060

BUILDING CHARACTERISTICS

ELEMENT	CD	CONSTRUCTION
Exterior Wall	05	AVERAGE 100
Roof Structur	08	IRREGULAR 100
Roof Cover	12	MODULAR MT 100
Interior Wall	05	DRYWALL 100
Interior Floo	12	HARDWOOD 50
Interior Floo	14	CARPET 50
Air Condition	03	CENTRAL 100
Heating Type	04	AIR DUCTED 100
Bedrooms		3 100
Bathrooms		2 100
Frame		N/A 100
Stories	1.	1. 100
Units		0 100
BUD8 Adjustme	06	DIST 1D 100
Occupancy	00	NONE 100
Quality	01	Quality Level 01
DOR CODE	0100	SINGLE FAMILY
MAP NUM		MKT AREA 09
NEIGHBORHOOD/LOC	9001.00	

AREA TYPE	TOTAL GROSS AREA	PCT OF BASE	TOT ADJ AREA	SUBAREA MARKET VALUE
BAS	1,536	100	1,536	160,641
BAS	105	100	105	10,981
BAS	480	100	480	50,201
BAS	750	100	750	78,438
FOP	417	30	125	13,074
PTO	200	5	10	1,046
TOTALS	3,488		3,006	314,381

MARKET ADJUSTMENTS

TYPE	MDL	EFF. AREA	TOT ADJ PTS	EFF. BASE RATE	REPL. COST NEW	AYB	EYB	ECON	FNCT		NORM	% COND
0900	01	3,006	89.0100	111.26	334,448	1929	2010	0	0	0	6.00	94.00

1 SNGL FAM – 100% - 2021 Heated Area: 2871 HX Base Yr 2021

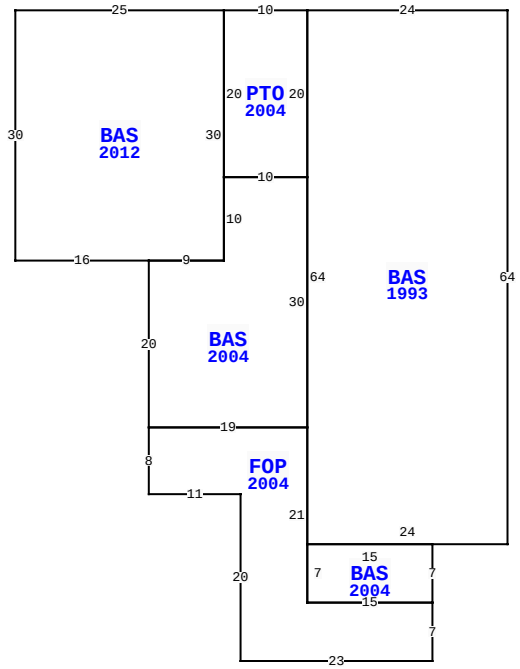

7649 MOTES RD, BRYCEVILLE

BLD DATE		LGL DATE	
XF DATE		LAND DATE	06/16/2023 MLU
INC DATE		AG DATE	

NASSAU COUNTY PROPERTY

PAGE 1 of 2 6

VALUATION SUMMARY

VALUATION BY		STANDARD
Tax Group: 6	Tax Dist:	
BUILDING MARKET VALUE		334,561
TOTAL MARKET OB/XF VALUE		4,908
TOTAL LAND VALUE - MARKET		95,000
TOTAL MARKET VALUE		434,469
SOH/AGL Deduction		125,849
ASSESSED VALUE		308,620
TOTAL EXEMPTION VALUE	HX HB	50,000
BASE TAXABLE VALUE		258,620
TOTAL JUST VALUE		434,469
NCON VALUE		0
INCOME VALUE		
PREVIOUS YEAR MKT VALUE		421,488

PERMIT NUM	DESCRIPTION	AMT	ISSUED

SALES DATA

OFF RECORD Number	DATE	TYPE INST	Q / U	V / I	RSN CD	SALE PRICE
2420/0343	12/18/2020	WD	Q	I	01	415,000
GRANTOR: STRICKLAND TONY & SUS						
GRANTEE: LOVE CRAIG & ANNA						
1264/1009	10/08/2004	WD	Q	I		160,000
GRANTOR: HOWARD RICHARD J & CA						
GRANTEE: STRICKLAND TONY & S						

BUILDING NOTES

BUILDING DIMENSIONS

BAS=[YR=1993] W24 PTO=[YR=2004] W10 BAS=[YR=2012] W25 S30 E16 BAS=[YR=2004] S20 FOP=[YR=2004] S8 E11 S20 E23 N7 BAS=[YR=2004] N7 W15 S7 E15 $ W15 N21 W19 $ E19 N30 W10 S10 W9 $ E9 N30 $ S20 E10 N20 $ S64 E24 N64 $.

EXTRA FEATURES

LN	OB/XF CODE	DESCRIPTION	BLD	CAP	L	W	UNITS	UT	Adj R	ADJ UNIT PRICE	ORIG COND	YEAR ON	YEAR ACTUAL	Q	% COND	OB/XF MKT VALUE	NOTES
1	0811	CONCRETE B	0	100	0	0	636.00	SF	5.20	5.20	100	2000	2000	3	79	2,613	
2	1242	WD DECK A	0	100	0	0	680.00	SF	7.50	7.50	100	2010	2010	3	45	2,295	

LAND DESCRIPTION

TOTAL OB/XF 4,908

LN	USE CODE	CLS	LAND USE DESCRIPTION	CAP	RD	LOC ZONE	FRONT	DEPTH	TOT LND UTS	UNIT TYPE	DT	DPTH FACT	% COND	TOT ADJ	UNIT PRICE	ADJ UNIT PRICE	LAND VALUE	OTHER ADJUSTMENTS AND NOTES	YEAR	DENSITY	DECL	FRZ	YR	CONSRV
1	000115	C	SFR ACRES	100	0006	OR	0.00	0.00	5.00	AC		1.00	1.00	1.00	19,000.00	19,000.00	95,000							

REVIEW DATE 04/19/2021 BY TWA Total Acres: 5.00 Total Land Value: 95,000 Market: 0 Agricultural: 0 Common: 95,000 PRINTED 08/06/2024 BY SYS

PARCELS 3-6 & 3-14
W165 FT OF E1320 FT OF N1/2 OF
NW1/4 & N263.70 FT OF W165FT

LOVE CRAIG & ANNA
7649 MOTES RD
BRYCEVILLE, FL 32009

2024

29-1S-24-0000-0003-0060

BUILDING CHARACTERISTICS

ELEMENT	CD	CONSTRUCTION
Exterior Wall	11	BD/BTN AVG 100
Roof Structur	03	GABLE/HIP 100
Roof Cover	12	MODULAR MT 100
Interior Wall		N/A 100
Interior Floo	03	CONC FINSH 100
Air Condition	99	N/A 100
Heating Type		N/A 100
Bedrooms		0 100
Bathrooms		0 100
Frame	02	WOOD FRAME 100
Stories	0	0 100
Units		0 100
Occupancy	00	NONE 100
Quality	03	Quality Level 03

DOR CODE 0100 SINGLE FAMILY
MAP NUM | MKT AREA 09
NEIGHBORHOOD/LOC 9001.00

AREA TYPE	TOTAL GROSS AREA	PCT OF BASE	TOT ADJ AREA	SUBAREA MARKET VALUE
BAS	2,100	100	2,100	18,235
UOP	1,120	20	224	1,945
TOTALS	3,220		2,324	20,180

MARKET ADJUSTMENTS

TYPE	MDL	EFF. AREA	TOT ADJ PTS	EFF. BASE RATE	REPL. COST NEW	AYB	EYB	ECON	FNCT		NORM	% COND
8600	01	2,324	50.9600	12.23	28,423	1977	2010	0	0	0	29.00	71.00

3 BARNS – 100% - 2021 Heated Area: 2100 HX Base Yr 2021

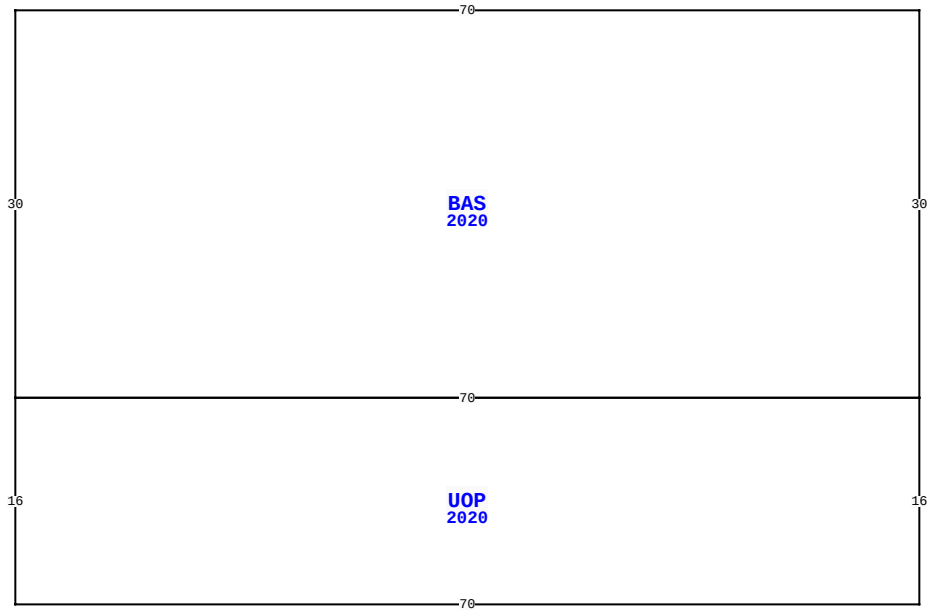

BLD DATE		LGL DATE	
XF DATE		LAND DATE	06/16/2023 MLU
INC DATE		AG DATE	

7649 MOTES RD, BRYCEVILLE

NASSAU COUNTY PROPERTY

PAGE 2 of 2 6

VALUATION SUMMARY

VALUATION BY		STANDARD
Tax Group: 6	Tax Dist:	
BUILDING MARKET VALUE		334,561
TOTAL MARKET OB/XF VALUE		4,908
TOTAL LAND VALUE - MARKET		95,000
TOTAL MARKET VALUE		434,469
SOH/AGL Deduction		125,849
ASSESSED VALUE		308,620
TOTAL EXEMPTION VALUE	HX HB	50,000
BASE TAXABLE VALUE		258,620
TOTAL JUST VALUE		434,469
NCON VALUE		0
INCOME VALUE		
PREVIOUS YEAR MKT VALUE		421,488

PERMIT NUM	DESCRIPTION	AMT	ISSUED

SALES DATA

OFF RECORD Number	DATE	TYPE INST	Q / U	V / I	RSN CD	SALE PRICE
2420/0343	12/18/2020	WD	Q	I	01	415,000
GRANTOR: STRICKLAND TONY & SUS						
GRANTEE: LOVE CRAIG & ANNA						
1264/1009	10/08/2004	WD	Q	I		160,000
GRANTOR: HOWARD RICHARD J & CA						
GRANTEE: STRICKLAND TONY & S						

BUILDING NOTES

BUILDING DIMENSIONS

BAS=[YR=2020] W70 S30 UOP=[YR=2020] S16 E70 N16 W70$ E70 N30$.

EXTRA FEATURES

LN	OB/XF CODE	DESCRIPTION	BLD	CAP	L	W	UNITS	UT	Adj R	ADJ UNIT PRICE	ORIG COND	YEAR ON	YEAR ACTUAL	Q	% COND	OB/XF MKT VALUE	NOTES

LAND DESCRIPTION

TOTAL OB/XF 0

LN	USE CODE	CLS	LAND USE DESCRIPTION	CAP	RD	LOC ZONE	FRONT	DEPTH	TOT LND UTS	UNIT TYPE	DT	DPTH FACT	% COND	TOT ADJ	UNIT PRICE	ADJ UNIT PRICE	LAND VALUE	OTHER ADJUSTMENTS AND NOTES	YEAR	DENSITY	DECL	FRZ	YR	CONSRV

REVIEW DATE 04/19/2021 BY TWA Total Acres: 5.00 Total Land Value: 95,000 Market: 0 Agricultural: 0 Common: 95,000 PRINTED 08/06/2024 BY SYS