PT OF E1/2 OF SW1/4 OF SW1/4
IN OR 1465/695
ESMT OR 1552/50

MASON STEVEN V & RHONDA J
31675 KNIGHT RD
HILLIARD, FL 32046

2024

28-4N-23-0000-0005-0020

BUILDING CHARACTERISTICS

ELEMENT	CD	CONSTRUCTION
Exterior Wall	10	ABOVE AVG 90
Exterior Wall	20	FACE BRICK 10
Roof Structur	08	IRREGULAR 100
Roof Cover	03	COMP SHNGL 100
Interior Wall	05	DRYWALL 100
Interior Floo	13	LVT/LAMNT 50
Interior Floo	14	CARPET 50
Air Condition	03	CENTRAL 100
Heating Type	04	AIR DUCTED 100
Bedrooms		3 100
Bathrooms		3 100
Frame	02	WOOD FRAME 100
Stories	0	0 100
Units		0 100
Occupancy	00	NONE 100
Quality	01	Quality Level 01
DOR CODE	5000	IMPROVED AG
MAP NUM		MKT AREA 09
NEIGHBORHOOD/LOC	9001.00	

AREA TYPE	TOTAL GROSS AREA	PCT OF BASE	TOT ADJ AREA	SUBAREA MARKET VALUE
BAS	3,017	100	3,017	383,867
FCP	840	25	210	26,720
FOP	76	30	23	2,926
FOP	116	30	35	4,453
FOP	312	30	94	11,960
FSP	384	40	154	19,594
FST	476	55	262	33,335
STP	42	10	4	509
STP	70	10	7	891
TOTALS	5,333		3,806	484,256

MARKET ADJUSTMENTS

TYPE	MDL	EFF. AREA	TOT ADJ PTS	EFF. BASE RATE	REPL. COST NEW	AYB	EYB	ECON	FNCT		NORM	% COND
0500	01	3,806	89.1000	133.65	508,672	2013	2013	0	0	0	4.80	95.20

1 SFR CUST – 100% - 2014 Heated Area: 3017 HX Base Yr 2014

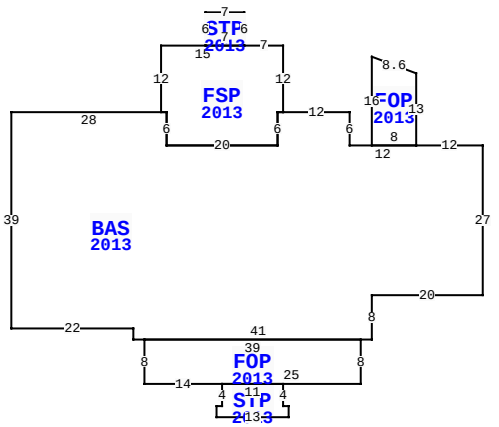

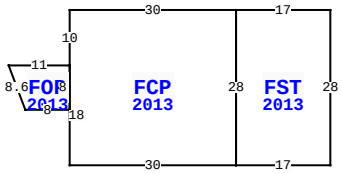

31675 KNIGHT RD, HILLIARD

BLD DATE	04/15/2015	MF	LGL DATE	06/13/2023	MLU
XF DATE			LAND DATE		
INC DATE			AG DATE		

NASSAU COUNTY PROPERTY

PAGE 1 of 1 4

VALUATION SUMMARY

VALUATION BY		STANDARD
Tax Group: 4	Tax Dist:	
BUILDING MARKET VALUE		484,256
TOTAL MARKET OB/XF VALUE		22,943
TOTAL LAND VALUE - MARKET		240,000
TOTAL MARKET VALUE		542,769
SOH/AGL Deduction		116,864
ASSESSED VALUE		425,905
TOTAL EXEMPTION VALUE	HX HB	50,000
BASE TAXABLE VALUE		375,905
TOTAL JUST VALUE		747,199
NCON VALUE		0
INCOME VALUE		
PREVIOUS YEAR MKT VALUE		726,597

PERMIT NUM	DESCRIPTION	AMT	ISSUED
R1413835	REPAIR/RRF	0	03/01/2014
M1217730	H/AC	0	11/01/2012
P1216170	NEW CONSTR	0	10/01/2012
B26248	NEW CONSTR	381,064	08/02/2012
B21072	AG BARN	0	02/01/2008

SALES DATA

OFF RECORD Number	DATE	TYPE INST	Q / U	V / I	RSN CD	SALE PRICE
1465/0695	12/13/2006	WD	Q	V		180,000

GRANTOR: BEVILLE RICHARD E & B
GRANTEE: MASON STEVEN V & RH

BUILDING NOTES

BUILDING DIMENSIONS

BAS=[YR=2013] W12 FOP=[YR=2013] N13 U3 L8 S16 E8$ W12 N6 W12 FSP=[YR=2013] N12 W7 STP=[YR=2013] N6 W7 S6 E7$ W15 S12 E1 S6 E20 N6 E1$ W1 S6 W20 N6 W28 S39 E22 S2 E2 FOP=[YR=2013] S8 E14 STP=[YR=2013] S4 W1 S2 E13 N2 W1 N4 W11$ E25 N8 W39$ E41 N8 E20 N27$ PTR= E20 FOP=[YR=2013] E11 FCP=[YR=2013] N10 E30 FST=[YR=2013] E17 S28 W17 N28$ S28 W30 N18$ S8 W8 U8 L3 $ W20$.

EXTRA FEATURES

LN	OB/XF CODE	DESCRIPTION	BLD	CAP	L	W	UNITS	UT	Adj R	ADJ UNIT PRICE	ORIG COND	YEAR ON	YEAR ACTUAL	Q	% COND	OB/XF MKT VALUE	NOTES
1	0940	SHEDS/PORT	0	100	11	11	121.00	SF	30.00	30.00	100	2013	2013	3	60	2,178	
2	0810	CONCRETE A	0	100	8	4	32.00	SF	6.50	6.50	100	2013	2013	3	94	196	
3	0812	CONCRETE C	0	100	42	28	1,176.00	SF	4.00	4.00	100	2013	2013	3	94	4,422	
4	0300	BOAT DCK W	0	100	0	0	175.00	SF	20.00	20.00	100	2012	2012	3	68	2,380	
5	0825	BRICK	0	100	12	5	60.00	SF	12.50	12.50	100	2013	2013	3	98	735	
6	0940	SHEDS/PORT	0	0	16	12	192.00	SF	30.00	30.00	100	2013	2013	3	60	3,456	
7	0681	POLE SHED	0	0	10	6	60.00	SF	15.00	15.00	100	2013	2013	3	71	639	
8	0500	FP-PRE FAB	0	100	0	0	1.00	UT	3,500.00	3,500.00	100	2013	2013	3	96	3,360	
9	0350	CARPORT WD	0	0	33	20	660.00	SF	13.00	13.00	100	2014	2014	3	65	5,577	

LAND DESCRIPTION

TOTAL OB/XF 22,943

LN	USE CODE	CLS	LAND USE DESCRIPTION	CAP	RD	LOC ZONE	FRONT	DEPTH	TOT LND UTS	UNIT TYPE	DT	DPTH FACT	% COND	TOT ADJ	UNIT PRICE	ADJ UNIT PRICE	LAND VALUE	OTHER ADJUSTMENTS AND NOTES	YEAR	DENSITY	DECL	FRZ	YR	CONSRV
1	005000	C	RURAL HOME	100	0005	OR	0.00	0.00	1.00	AC		1.00	1.00	1.00	30,000.00	30,000.00	30,000							
2	005010	A	SVCE ACRGE	0		OR	0.00	0.00	3.00	AC		1.00	1.00	1.00	500.00	500.00	1,500							
3	006005	A	PAST/GRAZE	0		OR	0.00	0.00	11.00	AC		1.00	1.00	1.00	370.00	370.00	4,070							
4	009910	M	MKT.VAL.AG	0		OR	0.00	0.00	14.00	AC		1.00	1.00	1.00	15,000.00	15,000.00	210,000							

REVIEW DATE 04/28/2020 BY TWA Total Acres: 15.00 Total Land Value: 35,570 Market: 210,000 Agricultural: 5,570 Common: 30,000 PRINTED 08/06/2024 BY SYS