PT OF SE1/4 OF SEC 28-3N-25E
IN OR 2171/770(EX OR 1871/860)

COLLINS NICKY MAX & SHIRLEY ANN
54468 WILDLIFE WAY
CALLAHAN, FL 32011

2024

28-3N-25-0000-0002-0090

NASSAU COUNTY PROPERTY

BUILDING CHARACTERISTICS

ELEMENT	CD	CONSTRUCTION
Exterior Wall	20	FACE BRICK 60
Exterior Wall	10	ABOVE AVG 40
Roof Structur	03	GABLE/HIP 100
Roof Cover	03	COMP SHNGL 100
Interior Wall	05	DRYWALL 100
Interior Floo	08	SHT VINYL 50
Interior Floo	14	CARPET 50
Air Condition	03	CENTRAL 100
Heating Type	04	AIR DUCTED 100
Bedrooms		3 100
Bathrooms		2.5 100
Frame	02	WOOD FRAME 100
Stories	2.	2. 100
Units		0 100
Occupancy	00	NONE 100
Quality	04	Quality Level 04
DOR CODE	0100	SINGLE FAMILY
MAP NUM		MKT AREA 05
NEIGHBORHOOD/LOC	5001.00	

AREA TYPE	TOTAL GROSS AREA	PCT OF BASE	TOT ADJ AREA	SUBAREA MARKET VALUE
BAS	1,551	100	1,551	201,165
FGR	460	55	253	32,815
FOP	204	30	61	7,912
FOP	400	30	120	15,564
FUS	976	100	976	126,587
STR	48	10	5	648
TOTALS	3,639		2,966	384,690

MARKET ADJUSTMENTS

TYPE	MDL	EFF. AREA	TOT ADJ PTS	EFF. BASE RATE	REPL. COST NEW	AYB	EYB	ECON	FNCT		NORM	% COND
0900	01	2,966	105.6090	132.01	391,542	2020	2020	0	0	0	1.75	98.25

1 SNGL FAM – 100% - 2021 Heated Area: 2527 HX Base Yr 2021

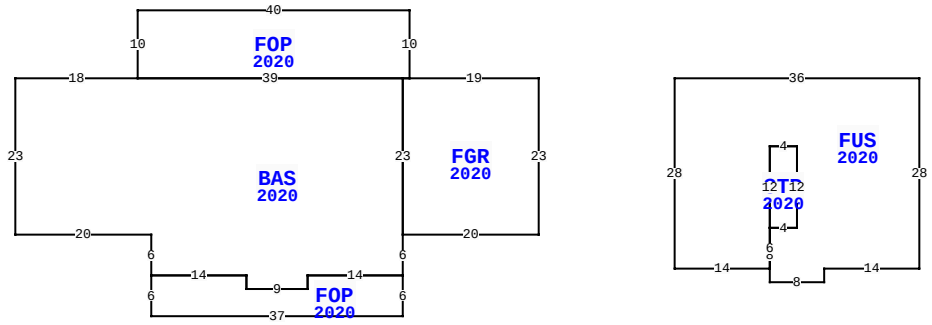

54468 WILDLIFE WAY, CALLAHAN

BLD DATE		LGL DATE	
XF DATE		LAND DATE	05/19/2023 MLU
INC DATE		AG DATE	

EXTRA FEATURES

LN	OB/XF CODE	DESCRIPTION	BLD	CAP	L	W	UNITS	UT	Adj R	ADJ UNIT PRICE	ORIG COND	YEAR ON	YEAR ACTUAL	Q	% COND	OB/XF MKT VALUE	NOTES
1	0810	CONCRETE A	0	100	25	23	575.00	SF	6.50	6.50	100	2020	2020	3	99	3,700	
2	0810	CONCRETE A	0	100	0	0	200.00	SF	6.50	6.50	100	2020	2020	3	99	1,287	

VALUATION SUMMARY

VALUATION BY		STANDARD
Tax Group: 4	Tax Dist:	
BUILDING MARKET VALUE		406,622
TOTAL MARKET OB/XF VALUE		4,987
TOTAL LAND VALUE - MARKET		280,000
TOTAL MARKET VALUE		691,609
SOH/AGL Deduction		470,574
ASSESSED VALUE		221,035
TOTAL EXEMPTION VALUE	HX HB	50,000
BASE TAXABLE VALUE		171,035
TOTAL JUST VALUE		691,609
NCON VALUE		0
INCOME VALUE		
PREVIOUS YEAR MKT VALUE		672,291

PERMIT NUM	DESCRIPTION	AMT	ISSUED
18012253	CO ISSUED	0	03/31/2020
1900668	GARAGE	49,712	02/01/2019
18008614	NEW CONSTR	335,559	12/01/2018

SALES DATA

OFF RECORD Number	DATE	TYPE INST	Q / U	V / I	RSN CD	SALE PRICE
2259/1174	2/28/2019	QC	U	V	11	100
GRANTOR: HIGGINBOTHAM ALBERT L						
GRANTEE: COLLINS NICKY M & S						
2171/0770	1/18/2018	WD	Q	V	02	148,500
GRANTOR: SOUDER JOHN & LORETTA						
GRANTEE: COLLINS NICKY MAX &						

BUILDING NOTES

BUILDING DIMENSIONS

BAS=[YR=2020;ORIG=-59,0] W18 S23 E20 S6 E14 S2 E9 N2 E14 N6 N23 W39 $
FUS=[YR=2020;ORIG=20,0] E36 S28 W14 S2 W8 N8 E4 N12 W4 S12 S6 W14 N28 $
FGR=[YR=2020;ORIG=0,0] W19 W1 S23 E20 N23 $
FOP=[YR=2020;ORIG=-19,0] N10 W40 S10 E39 E1 $
FOP=[YR=2020;ORIG=-57,29] S6 E37 N6 W14 S2 W9 N2 W14 $
STR=[YR=2020;ORIG=34,22] N12 E4 S12 W4 $
PTR=[ORIG=0,0] E20 W20 $
.

LAND DESCRIPTION

TOTAL OB/XF 4,987

LN	USE CODE	CLS	LAND USE DESCRIPTION	CAP	RD	LOC ZONE	FRONT	DEPTH	TOT LND UTS	UNIT TYPE	DT	DPTH FACT	% COND	TOT ADJ	UNIT PRICE	ADJ UNIT PRICE	LAND VALUE	OTHER ADJUSTMENTS AND NOTES	YEAR	DENSITY	DECL	FRZ	YR	CONSRV
1	000115	C	SFR ACRES	100		OR	0.00	0.00	20.00	AC		1.00	1.00	1.00	14,000.00	14,000.00	280,000							

REVIEW DATE 02/05/2024 BY KWA Total Acres: 20.00 Total Land Value: 280,000 Market: 0 Agricultural: 0 Common: 280,000 PRINTED 08/06/2024 BY SYS

PT OF SE1/4 OF SEC 28-3N-25E
IN OR 2171/770(EX OR 1871/860)

COLLINS NICKY MAX & SHIRLEY ANN
54468 WILDLIFE WAY
CALLAHAN, FL 32011

2024

28-3N-25-0000-0002-0090

NASSAU COUNTY PROPERTY

BUILDING CHARACTERISTICS

ELEMENT	CD	CONSTRUCTION
Exterior Wall	25	MOD METAL 100
Roof Structur	10	STEEL FRME 100
Roof Cover	12	MODULAR MT 100
Interior Wall	07	NONE 100
Interior Floo	03	CONC FINSH 100
Air Condition	01	NONE 100
Heating Type	01	NONE 100
Bedrooms		0 100
Bathrooms		0 100
Frame	05	STEEL 100
Stories	1.	1. 100
Units		0 100
Occupancy	00	NONE 100
Quality	06	Quality Level 06
DOR CODE	0100	SINGLE FAMILY
MAP NUM		MKT AREA 05
NEIGHBORHOOD/LOC	5001.00	

AREA TYPE	TOTAL GROSS AREA	PCT OF BASE	TOT ADJ AREA	SUBAREA MARKET VALUE
BAS	1,040	100	1,040	21,932
TOTALS	1,040		1,040	21,932

MARKET ADJUSTMENTS

TYPE	MDL	EFF. AREA	TOT ADJ PTS	EFF. BASE RATE	REPL. COST NEW	AYB	EYB	ECON	FNCT		NORM	% COND
6500	01	1,040	62.1000	21.74	22,610	2020	2020	0	0	0	3.00	97.00

2 GARAGE RES – 100% - 2021 Heated Area: 1040 HX Base Yr 2021

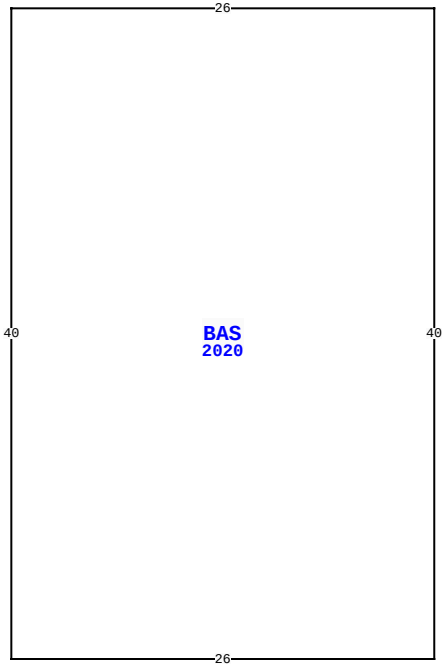

54468 WILDLIFE WAY, CALLAHAN

BLD DATE		LGL DATE	
XF DATE		LAND DATE	05/19/2023 MLU
INC DATE		AG DATE	

EXTRA FEATURES

LN	OB/XF CODE	DESCRIPTION	BLD	CAP	L	W	UNITS	UT	Adj R	ADJ UNIT PRICE	ORIG COND	YEAR ON	YEAR ACTUAL	Q	% COND	OB/XF MKT VALUE	NOTES

VALUATION SUMMARY

VALUATION BY		STANDARD
Tax Group: 4	Tax Dist:	
BUILDING MARKET VALUE		406,622
TOTAL MARKET OB/XF VALUE		4,987
TOTAL LAND VALUE - MARKET		280,000
TOTAL MARKET VALUE		691,609
SOH/AGL Deduction		470,574
ASSESSED VALUE		221,035
TOTAL EXEMPTION VALUE	HX HB	50,000
BASE TAXABLE VALUE		171,035
TOTAL JUST VALUE		691,609
NCON VALUE		0
INCOME VALUE		
PREVIOUS YEAR MKT VALUE		672,291

PERMIT NUM	DESCRIPTION	AMT	ISSUED

SALES DATA

OFF RECORD Number	DATE	TYPE INST	Q U	V I	RSN CD	SALE PRICE
2259/1174	2/28/2019	QC	U	V	11	100
GRANTOR: HIGGINBOTHAM ALBERT L						
GRANTEE: COLLINS NICKY M & S						
2171/0770	1/18/2018	WD	Q	V	02	148,500
GRANTOR: SOUDER JOHN & LORETTA						
GRANTEE: COLLINS NICKY MAX &						

BUILDING NOTES

BUILDING DIMENSIONS

BAS=[YR=2020] W26 S40 E26 N40$.

LAND DESCRIPTION

TOTAL OB/XF 0

LN	USE CODE	CLS	LAND USE DESCRIPTION	CAP	RD	LOC ZONE	FRONT	DEPTH	TOT LND UTS	UNIT TYPE	DT	DPTH FACT	% COND	TOT ADJ	UNIT PRICE	ADJ UNIT PRICE	LAND VALUE	OTHER ADJUSTMENTS AND NOTES	YEAR	DENSITY	DECL	FRZ	YR	CONSRV

REVIEW DATE 02/05/2024 BY KWA Total Acres: 20.00 Total Land Value: 280,000 Market: 0 Agricultural: 0 Common: 280,000 PRINTED 08/06/2024 BY SYS