N160 FT OF E210 FT OF LOT 7
IN OR 733 PG 53
EX R/W IN OR 445/224

WILSON MARK MONROE SR & TANNYA
45203 HODGES ROAD
CALLAHAN, FL 32011

2024

28-2N-25-3100-0007-0000

BUILDING CHARACTERISTICS

ELEMENT	CD	CONSTRUCTION
Exterior Wall	30	VINYL 100
Roof Structur	08	IRREGULAR 100
Roof Cover	03	COMP SHNGL 100
Interior Wall	05	DRYWALL 100
Interior Floo	14	CARPET 70
Interior Floo	11	CLAY TILE 30
Air Condition	03	CENTRAL 100
Heating Type	04	AIR DUCTED 100
Bedrooms		3 100
Bathrooms		3 100
Frame	02	WOOD FRAME 100
Stories	1.5	1.5 100
Units		0 100
BUD8 Adjustme	06	DIST 1D 100
Occupancy	00	NONE 100
Quality	03	Quality Level 03
DOR CODE	0100	SINGLE FAMILY
MAP NUM		MKT AREA 08
NEIGHBORHOOD/LOC	8026.00	

AREA TYPE	TOTAL GROSS AREA	PCT OF BASE	TOT ADJ AREA	SUBAREA MARKET VALUE
BAS	1,174	100	1,174	140,365
FGR	556	55	306	36,586
FOP	72	30	22	2,631
FOP	168	30	50	5,978
FUS	960	100	960	114,779
PTO	158	5	8	957
TOTALS	3,088		2,520	301,294

MARKET ADJUSTMENTS

TYPE	MDL	EFF. AREA	TOT ADJ PTS	EFF. BASE RATE	REPL. COST NEW	AYB	EYB	ECON	FNCT		NORM	% COND
0900	01	2,520	108.3840	135.48	341,410	1999	1999	0	0	0	11.75	88.25

1 SNGL FAM – 100% - 1997 Heated Area: 2134 HX Base Yr 1997

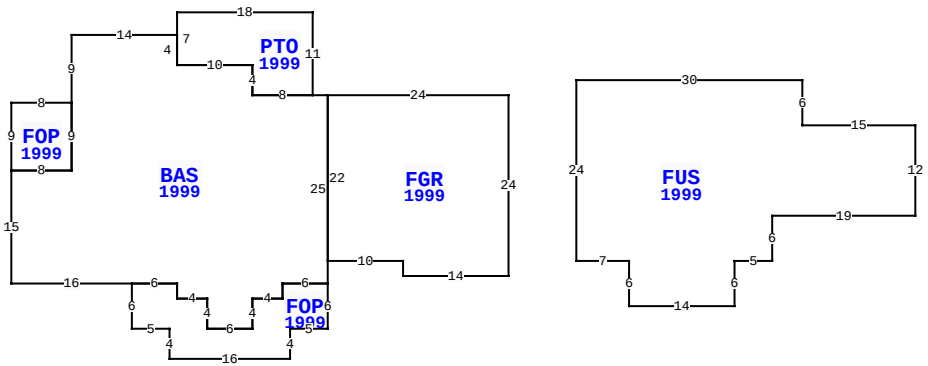

45203 HODGES RD, CALLAHAN

BLD DATE		LGL DATE	
XF DATE		LAND DATE	
INC DATE		AG DATE	

NASSAU COUNTY PROPERTY

PAGE 1 of 1 6

VALUATION SUMMARY

VALUATION BY		STANDARD
Tax Group: 6	Tax Dist:	
BUILDING MARKET VALUE		301,294
TOTAL MARKET OB/XF VALUE		4,866
TOTAL LAND VALUE - MARKET		35,000
TOTAL MARKET VALUE		341,160
SOH/AGL Deduction		190,026
ASSESSED VALUE		151,134
TOTAL EXEMPTION VALUE	HX HB	50,000
BASE TAXABLE VALUE		101,134
TOTAL JUST VALUE		341,160
NCON VALUE		0
INCOME VALUE		
PREVIOUS YEAR MKT VALUE		322,771

HSE ADJ FOR SHAPE

PERMIT NUM	DESCRIPTION	AMT	ISSUED
B985467	NEW CONSTR	128,300	10/01/1998
Z970930	NEW CONSTR	0	11/01/1997

SALES DATA

OFF RECORD Number	DATE	TYPE INST	Q / U	V / I	RSN CD	SALE PRICE
0733/0053	7/03/1995	WD	U	I	11	22,500
GRANTOR: STANCAVAGE EDWARD & M						
GRANTEE: WILSON MARK SR & TA						
0475/0290	12/01/1985	WD	U	I		56,000
GRANTOR:						
GRANTEE:						

BUILDING NOTES

BUILDING DIMENSIONS

BAS=[YR=1999;ORIG=-24,0] W2 W8 N4 W10 N4 W14 S9 S9 W8 S15 E16 E6 S2 E4 S4 E6 N4 E4 N2 E6 N25 $
FUS=[YR=1999;ORIG=9,-2] E30 S6 E15 S12 W19 S6 W5 S6 W14 N6 W7 N24 $
FGR=[YR=1999;ORIG=0,0] W24 S22 E10 S2 E14 N24 $
FOP=[YR=1999;ORIG=-50,25] S6 E5 S4 E16 N4 E5 N6 W6 S2 W4 S4 W6 N4 W4 N2 W6 $
PTO=[YR=1999;ORIG=-26,0] N11 W18 S7 E10 S4 E8 $
FOP=[YR=1999;ORIG=-58,1] W8 S9 E8 N9 $
.

EXTRA FEATURES

LN	OB/XF CODE	DESCRIPTION	BLD	CAP	L	W	UNITS	UT	Adj R	ADJ UNIT PRICE	ORIG COND	YEAR ON	YEAR ACTUAL	Q	% COND	OB/XF MKT VALUE	NOTES
1	0810	CONCRETE A	0	100	24	30	720.00	SF	6.50	6.50	100	1997	1997	3	73	3,416	
2	0525	GAZEBO	0	100	0	0	1.00	UT	5,000.00	5,000.00	100	2001	2001	3	29	1,450	

LAND DESCRIPTION

TOTAL OB/XF 4,866

LN	USE CODE	CLS	LAND USE DESCRIPTION	CAP	RD	LOC ZONE	FRONT	DEPTH	TOT LND UTS	UNIT TYPE	DT	DPTH FACT	% COND	TOT ADJ	UNIT PRICE	ADJ UNIT PRICE	LAND VALUE	OTHER ADJUSTMENTS AND NOTES	YEAR	DENSITY	DECL	FRZ	YR	CONSRV
1	000100	C	SFR	100	0004	OR	160.00	190.00	1.00	AC		1.00	1.00	1.00	35,000.00	35,000.00	35,000							

REVIEW DATE 01/06/2023 BY KWA Total Acres: 1.00 Total Land Value: 35,000 Market: 0 Agricultural: 0 Common: 35,000 PRINTED 08/06/2024 BY SYS