PT LOTS 6 & 7
IN OR 2648/1398
BRANDIES & PICKETTS SUB PB 1/4

PINCOMB MYRON & AMANDA
542201 LEM TURNER RD
CALLAHAN, FL 32011

2024

28-2N-25-3080-0006-0050

BUILDING CHARACTERISTICS

ELEMENT	CD	CONSTRUCTION
Exterior Wall	31	HARDIE BRD 100
Roof Structur	08	IRREGULAR 100
Roof Cover	13	STAND SEAM 100
Interior Wall	05	DRYWALL 100
Interior Floo	12	HARDWOOD 60
Interior Floo	14	CARPET 40
Air Condition	03	CENTRAL 100
Heating Type	04	AIR DUCTED 100
Bedrooms		5 100
Bathrooms		5 100
Frame	02	WOOD FRAME 100
Stories	2.	2. 100
Units		0 100
Quality	03	Quality Level 03
DOR CODE	0100	SINGLE FAMILY
MAP NUM		MKT AREA 08
NEIGHBORHOOD/LOC	8026.00	

AREA TYPE	TOTAL GROSS AREA	PCT OF BASE	TOT ADJ AREA	SUBAREA MARKET VALUE
BAS	2,769	100	2,769	611,368
FGR	1,017	55	559	123,422
FOP	380	30	114	25,170
FOP	432	30	130	28,703
FST	60	55	33	7,286
FUS	1,541	100	1,541	340,237
FUS	652	100	652	143,955
STP	12	10	1	221
STR	100	10	10	2,208
TOTALS	6,963		5,809	1,282,569

MARKET ADJUSTMENTS

TYPE	MDL	EFF. AREA	TOT ADJ PTS	EFF. BASE RATE	REPL. COST NEW	AYB	EYB	ECON	FNCT		NORM	% COND
0500	11	5,809	147.1930	220.79	1,282,569	2022	2022	0	0	0	0.00	100.00

1 SFR CUST – 100% - 2024 Heated Area: 4962 HX Base Yr 2024

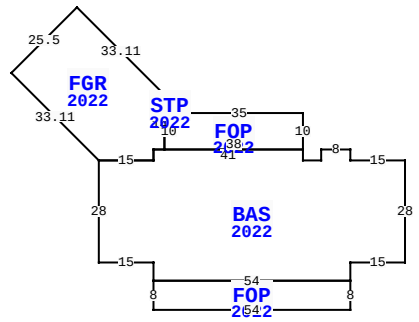

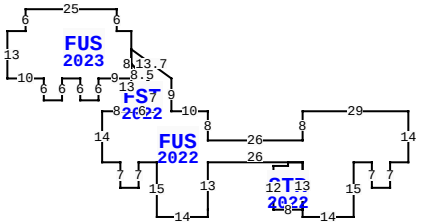

542201 LEM TURNER RD, CALLAHAN

BLD DATE		LGL DATE	
XF DATE		LAND DATE	05/19/2023 MLU
INC DATE		AG DATE	

NASSAU COUNTY PROPERTY

PAGE 1 of 1 6

VALUATION SUMMARY

VALUATION BY		STANDARD
Tax Group: 6	Tax Dist:	
BUILDING MARKET VALUE		1,282,569
TOTAL MARKET OB/XF VALUE		128,879
TOTAL LAND VALUE - MARKET		75,600
TOTAL MARKET VALUE		1,487,048
SOH/AGL Deduction		500,000
ASSESSED VALUE		987,048
TOTAL EXEMPTION VALUE	HX HB	50,000
BASE TAXABLE VALUE		937,048
TOTAL JUST VALUE		1,487,048
NCON VALUE		0
INCOME VALUE		
PREVIOUS YEAR MKT VALUE		1,416,229

ASPHALT DRIVEWAY IS ON PRCL 5-3

PERMIT NUM	DESCRIPTION	AMT	ISSUED
C2106182	CO		08/23/2022
B2210754	SCREEN ENCLOSURE	110,544	07/14/2022
B2202073	POOL	107,175	02/07/2022
B2106182	SFR	725,648	05/13/2021

SALES DATA

OFF RECORD Number	DATE	TYPE INST	Q / U	V / I	RSN CD	SALE PRICE
2648/1398	6/05/2023	QC	U	V	11	100

GRANTOR: OUTDOOR LIFE HOLDINGS
GRANTEE: PINCOMB MYRON & AMA

BUILDING NOTES

EXTRA FEATURES

LN	OB/XF CODE	DESCRIPTION	BLD	CAP	L	W	UNITS	UT	Adj R	ADJ UNIT PRICE	ORIG COND	YEAR ON	YEAR ACTUAL	Q	% COND	OB/XF MKT VALUE	NOTES
1	0462	ST/AL FNC	0	100	162	0	648.00	SF	10.00	10.00	100	2023	2022		98	6,350	
2	0463	FENCE GATE	0	100	0	0	2.00	UT	300.00	300.00	100	2023	2022		99	594	
3	0855	CONC PAVER	0	100	0	0	1,425.00	SF	10.00	10.00	100	2023	2022		100	14,250	
4	0502	FP-CUSTOM	0	100	0	0	1.00	UT	10,000.00	10,000.00	100	2023	2022		100	10,000	
5	0600	SUMMER KIT	0	100	0	0	1.00	UT	5,000.00	5,000.00	100	2023	2022		97	4,850	
6	0911	SCRN RM A	0	100	0	0	2,198.00	SF	17.50	17.50	100	2023	2022		97	37,311	
7	0861	POOL GUNIT	0	100	30	16	480.00	SF	85.00	85.00	100	2023	2022		98	39,984	
8	0871	POOL HTR R	0	100	0	0	1.00	UT	2,000.00	2,000.00	100	2023	2022		97	1,940	
9	0855	CONC PAVER	0	100	0	0	1,360.00	SF	10.00	10.00	100	2023	2022		100	13,600	

BUILDING DIMENSIONS

BAS=[YR=2022;ORIG=0,0] W15 N3 W8 S3 W5 N3 W41 S3 W15 S28 E15 S5 E54 N5 E15 N28 $
FUS=[YR=2022;ORIG=64,-25] D8R11 S9 E10 S8 E26 N8 E29 S14 W5 S7 W5 N7 W5 S15 W14 N2 N13 W26 S13 S2 W14 N15 W5 S7 W5 N7 W5 N14 E8 E6 N7 U6L6 N4 $
FGR=[YR=2022;ORIG=-66,-17] N1 U24L24 D18L18 D24R24 E15 N3 E3 N14 $
PTR=[ORIG=0,0] E30 N30 W30 S30 $
FUS=[YR=2023;ORIG=30,-30] E5 N6 E25 S6 E4 S5 S8 W9 S6 W5 N6 W5 S6 W5 N6 W10 N13 $
FOP=[YR=2022;ORIG=-69,33] S8 E54 N8 W54 $
FOP=[YR=2022;ORIG=-28,-3] N10 W35 W3 S10 E38 $

LAND DESCRIPTION

TOTAL OB/XF 128,879

LN	USE CODE	CLS	LAND USE DESCRIPTION	CAP	RD	LOC ZONE	FRONT	DEPTH	TOT LND UTS	UNIT TYPE	DT	DPTH FACT	% COND	TOT ADJ	UNIT PRICE	ADJ UNIT PRICE	LAND VALUE	OTHER ADJUSTMENTS AND NOTES	YEAR	DENSITY	DECL	FRZ	YR	CONSRV
1	000115	C	SFR ACRES	100		OR			2.16	AC		1.00	1.00	1.00	35,000.00	35,000.00	75,600							

REVIEW DATE 12/08/2022 BY KW Total Acres: 2.16 Total Land Value: 75,600 Market: 0 Agricultural: 0 Common: 75,600 PRINTED 08/06/2024 BY SYS