S1/2 OF SE1/4
1/2 INT IN DB 97/20
PT OR 451/744 & PT OR 751/27

HAMRICK CHRISTOPHER & MICHELLE
17250 ANDREWS RD
HILLIARD, FL 32046

2024

27-4N-23-0000-0013-0000

NASSAU COUNTY PROPERTY

BUILDING CHARACTERISTICS

ELEMENT	CD	CONSTRUCTION
Exterior Wall	16	WD FR STUC 90
Exterior Wall	21	STONE 10
Roof Structur	08	IRREGULAR 100
Roof Cover	03	COMP SHNGL 100
Interior Wall	05	DRYWALL 100
Interior Floo	14	CARPET 70
Interior Floo	11	CLAY TILE 30
Air Condition	03	CENTRAL 100
Heating Type	04	AIR DUCTED 100
Bedrooms		5 100
Bathrooms		4.5 100
Frame	02	WOOD FRAME 100
Stories	1.	1. 100
Units		0 100
Quality	01	Quality Level 01
DOR CODE	0100	SINGLE FAMILY
MAP NUM		MKT AREA 09
NEIGHBORHOOD/LOC	9001.00	

AREA TYPE	TOTAL GROSS AREA	PCT OF BASE	TOT ADJ AREA	SUBAREA MARKET VALUE
BAS	1,889	100	1,889	275,700
BAS	3,051	100	3,051	445,293
FGR	461	55	254	37,071
FGR	1,080	55	594	86,694
FOP	61	30	18	2,627
FOP	256	30	77	11,238
FOP	686	30	206	30,066
FST	24	55	13	1,897
STR	76	10	8	1,168
TOTALS	7,584		6,110	891,754

MARKET ADJUSTMENTS

TYPE	MDL	EFF. AREA	TOT ADJ PTS	EFF. BASE RATE	REPL. COST NEW	AYB	EYB	ECON	FNCT		NORM	% COND
0500	01	6,110	97.2990	145.95	891,754	2023	2023	0	0	0	0.00	100.00

3 SFR CUST – 100% - 2024 Heated Area: 4940 HX Base Yr

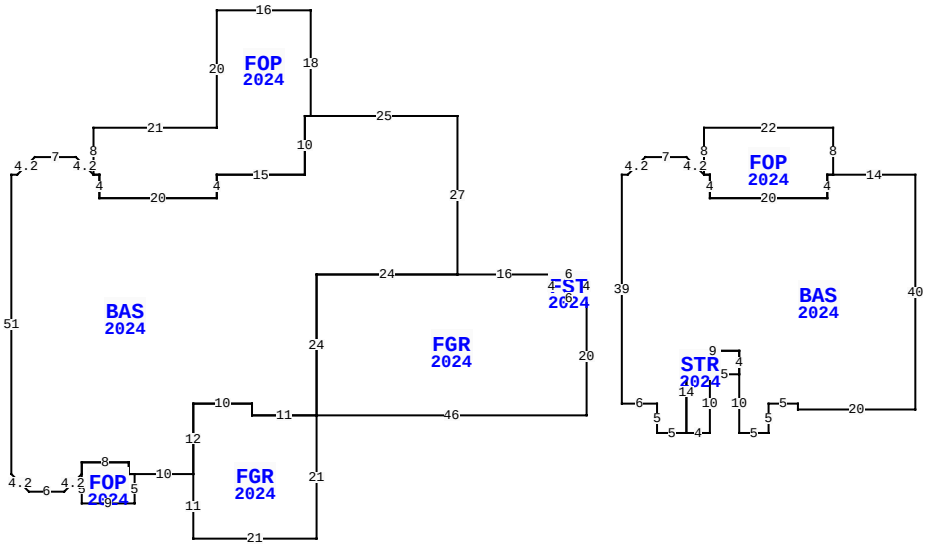

17250 ANDREWS RD, HILLIARD

BLD DATE		LGL DATE	
XF DATE		LAND DATE	05/19/2023 MLU
INC DATE		AG DATE	

VALUATION SUMMARY

VALUATION BY		STANDARD
Tax Group: 4	Tax Dist:	
BUILDING MARKET VALUE		915,074
TOTAL MARKET OB/XF VALUE		44,235
TOTAL LAND VALUE - MARKET		286,384
TOTAL MARKET VALUE		1,245,693
SOH/AGL Deduction		78,440
ASSESSED VALUE		1,167,253
TOTAL EXEMPTION VALUE	13	1,167,253
BASE TAXABLE VALUE		0
TOTAL JUST VALUE		1,245,693
NCON VALUE		959,309
INCOME VALUE		
PREVIOUS YEAR MKT VALUE		357,980

PERMIT NUM	DESCRIPTION	AMT	ISSUED
230008940	CO ISSUED		07/13/2023
22009203	GARAGE	37,170	06/15/2022
22009204	NEW CONSTR	823,201	06/15/2022

SALES DATA

OFF RECORD Number	DATE	TYPE INST	Q U	V I	RSN CD	SALE PRICE
2395/0065	9/23/2020	WD	Q	V	01	168,000
GRANTOR: RODGERS HENRY BENJAMI						
GRANTEE: HAMRICK CHRISTOPHER						
0451/0744	4/02/1985	PR	U	V	01	100
GRANTOR: HAMILTON MARY RODGERS						
GRANTEE: RODGERS MAGGIE STOK						

BUILDING NOTES

BUILDING DIMENSIONS

FGR=[YR=2024;ORIG=92,20] W16 W24 S24 E46 N20 W6 N4 $
FOP=[YR=2024;ORIG=51,-25] W16 S20 W21 S8 E1 S4 E20 N4 E15 N10 E1 N18 $
FOP=[YR=2024;ORIG=20,52] W8 S2 S5 E9 N5 W1 N2 $
FGR=[YR=2024;ORIG=31,42] E10 S2 E11 S21 W21 N11 N12 $
FST=[YR=2024;ORIG=92,20] E6 S4 W6 N4 $
BAS=[YR=2024;ORIG=76,-7] W25 W1 S10 W15 S4 W20 N4 W1 U3L3 W7 D3L3 W1 S51 D3R3 E6 U3R3 N2 E8 S2 E1 E10 N12 E10 S2 E11 N24 E24 N27 $
BAS=[YR=2024;ORIG=154,3] W14 W1 S4 W20 N4 W1 U3L3 W7 D3L3 W1 S39 E6 S5 E5 N14 E9 S4 S10 E5 N5 E5 S1 E20 N40 $
STR=[YR=2024;ORIG=115,47] N14 E9 S4 W5 S10 W4 $

EXTRA FEATURES

LN	OB/XF CODE	DESCRIPTION	BLD	CAP	L	W	UNITS	UT	Adj R	ADJ UNIT PRICE	ORIG COND	YEAR ON	YEAR ACTUAL	Q	% COND	OB/XF MKT VALUE	NOTES
1	0501	FP-AVERAGE	0	100	0	0	1.00	UT	5,000.00	5,000.00	100	2024	2023		100	5,000	
2	0810	CONCRETE A	0	100	0	0	450.00	SF	6.50	6.50	100	2024	2023		100	2,925	
3	0855	CONC PAVER	0	100	0	0	3,631.00	SF	10.00	10.00	100	2024	2023		100	36,310	

LAND DESCRIPTION

TOTAL OB/XF 44,235

LN	USE CODE	CLS	LAND USE DESCRIPTION	CAP	RD	LOC ZONE	FRONT	DEPTH	TOT LND UTS	UNIT TYPE	DT	DPTH FACT	% COND	TOT ADJ	UNIT PRICE	ADJ UNIT PRICE	LAND VALUE	OTHER ADJUSTMENTS AND NOTES	YEAR	DENSITY	DECL	FRZ	YR	CONSRV
1	000115	C	SFR ACRES	100		OR	0.00	0.00	25.57	AC		1.00	1.00	0.80	14,000.00	11,200.00	286,384							

REVIEW DATE 08/17/2023 BY WW Total Acres: 25.57 Total Land Value: 286,384 Market: 0 Agricultural: 0 Common: 286,384 PRINTED 08/06/2024 BY SYS

S1/2 OF SE1/4
1/2 INT IN DB 97/20
PT OR 451/744 & PT OR 751/27

HAMRICK CHRISTOPHER & MICHELLE
17250 ANDREWS RD
HILLIARD, FL 32046

2024

27-4N-23-0000-0013-0000

NASSAU COUNTY PROPERTY

BUILDING CHARACTERISTICS

ELEMENT	CD	CONSTRUCTION
Exterior Wall	25	MOD METAL 100
Roof Structur	03	GABLE/HIP 100
Roof Cover	12	MODULAR MT 100
Interior Wall	07	NONE 100
Interior Floo	03	CONC FINSH 100
Air Condition	01	NONE 100
Heating Type	01	NONE 100
Bedrooms		0 100
Bathrooms		0 100
Frame	05	STEEL 100
Stories	1.	1. 100
Units		0 100
Quality	06	Quality Level 06

DOR CODE 0100 SINGLE FAMILY
MAP NUM | MKT AREA 09
NEIGHBORHOOD/LOC 9001.00

AREA TYPE	TOTAL GROSS AREA	PCT OF BASE	TOT ADJ AREA	SUBAREA MARKET VALUE
BAS	1,200	100	1,200	23,320
TOTALS	1,200		1,200	23,320

MARKET ADJUSTMENTS

TYPE	MDL	EFF. AREA	TOT ADJ PTS	EFF. BASE RATE	REPL. COST NEW	AYB	EYB	ECON	FNCT		NORM	% COND
6500	01	1,200	56.0740	19.63	23,556	2023	2023	0	0	0	1.00	99.00

4 GARAGE RES – 100% - 2024 Heated Area: 1200 HX Base Yr

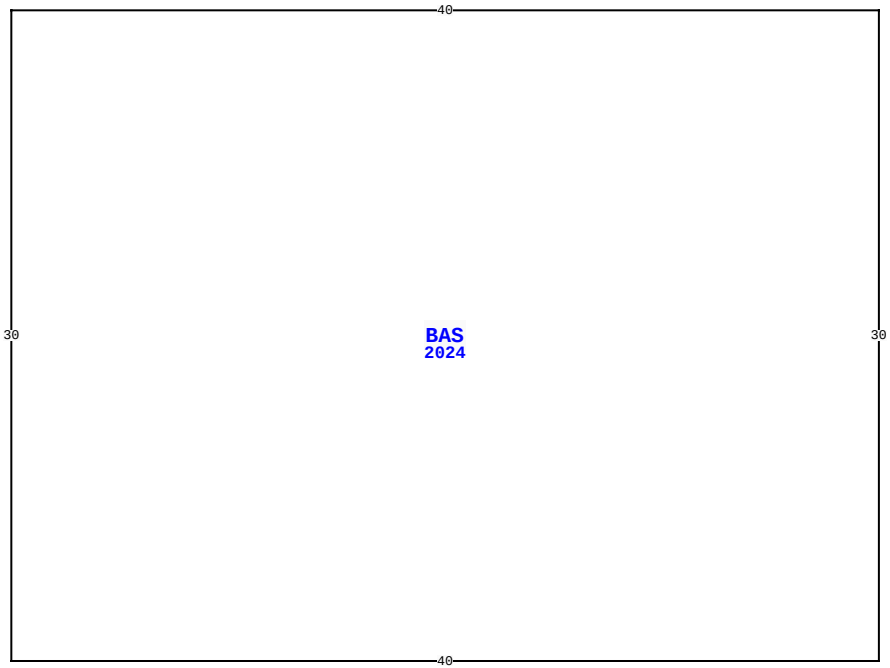

17250 ANDREWS RD, HILLIARD

BLD DATE		LGL DATE	
XF DATE		LAND DATE	05/19/2023 MLU
INC DATE		AG DATE	

VALUATION SUMMARY

VALUATION BY		STANDARD
Tax Group: 4	Tax Dist:	
BUILDING MARKET VALUE		915,074
TOTAL MARKET OB/XF VALUE		44,235
TOTAL LAND VALUE - MARKET		286,384
TOTAL MARKET VALUE		1,245,693
SOH/AGL Deduction		78,440
ASSESSED VALUE		1,167,253
TOTAL EXEMPTION VALUE	13	1,167,253
BASE TAXABLE VALUE		0
TOTAL JUST VALUE		1,245,693
NCON VALUE		959,309
INCOME VALUE		
PREVIOUS YEAR MKT VALUE		357,980

PERMIT NUM	DESCRIPTION	AMT	ISSUED

SALES DATA

OFF RECORD Number	DATE	TYPE INST	Q / U	V / I	RSN CD	SALE PRICE
2395/0065	9/23/2020	WD	Q	V	01	168,000
GRANTOR: RODGERS HENRY BENJAMI						
GRANTEE: HAMRICK CHRISTOPHER						
0451/0744	4/02/1985	PR	U	V	01	100
GRANTOR: HAMILTON MARY RODGERS						
GRANTEE: RODGERS MAGGIE STOK						

BUILDING NOTES

BUILDING DIMENSIONS

BAS=[YR=2024;ORIG=30,10] E40 S30 W40 N30 $
.

EXTRA FEATURES

L N	OB/XF CODE	DESCRIPTION	BLD	CAP	L	W	UNITS	UT	Adj R	ADJ UNIT PRICE	ORIG COND	YEAR ON	YEAR ACTUAL	Q	% COND	OB/XF MKT VALUE	NOTES

LAND DESCRIPTION

TOTAL OB/XF 0

L N	USE CODE	CLS	LAND USE DESCRIPTION	CAP	R D	LOC ZONE	FRONT	DEPTH	TOT LND UTS	UNIT TYPE	D T	DPTH FACT	% COND	TOT ADJ	UNIT PRICE	ADJ UNIT PRICE	LAND VALUE	OTHER ADJUSTMENTS AND NOTES	YEAR	DENSITY	DECL	FRZ	YR	CONSRV

REVIEW DATE 08/17/2023 BY WW Total Acres: 25.57 Total Land Value: 286,384 Market: 0 Agricultural: 0 Common: 286,384 PRINTED 08/06/2024 BY SYS