LOT 38
IN OR 2159/1227
SHELL COVE PBK 8/150

HODGES PAMELA J
2135 SHELL COVE CIRCLE
FERNANDINA BEACH, FL 32034

**2024**

**27-3N-28-1192-0038-0000**

## BUILDING CHARACTERISTICS

| ELEMENT | CD | CONSTRUCTION |
|---|---|---|
| Exterior Wall | 16 | WD FR STUC 60 |
| Exterior Wall | 10 | ABOVE AVG 40 |
| Roof Structur | 08 | IRREGULAR 100 |
| Roof Cover | 03 | COMP SHNGL 100 |
| Interior Wall | 05 | DRYWALL 100 |
| Interior Floo | 11 | CLAY TILE 50 |
| Interior Floo | 14 | CARPET 50 |
| Air Condition | 03 | CENTRAL 100 |
| Heating Type | 04 | AIR DUCTED 100 |
| Bedrooms | | 3 100 |
| Bathrooms | | 2.5 100 |
| Frame | 02 | WOOD FRAME 100 |
| Stories | 1.5 | 1.5 100 |
| Units | | 0 100 |
| Occupancy | 00 | NONE 100 |
| Quality | 05 | Quality Level 05 |
| DOR CODE | 0100 | SINGLE FAMILY |
| MAP NUM | | MKT AREA 01 |
| NEIGHBORHOOD/LOC | 1011.500 | |

| AREA TYPE | TOTAL GROSS AREA | PCT OF BASE | TOT ADJ AREA | SUBAREA MARKET VALUE |
|---|---|---|---|---|
| BAS | 1,359 | 100 | 1,359 | 253,107 |
| FGR | 276 | 55 | 152 | 28,310 |
| FOP | 102 | 30 | 31 | 5,774 |
| FOP | 230 | 30 | 69 | 12,851 |
| FUS | 627 | 100 | 627 | 116,775 |
| STR | 60 | 10 | 6 | 1,118 |
| TOTALS | 2,654 | | 2,244 | 417,934 |

## MARKET ADJUSTMENTS

| TYPE | MDL | EFF. AREA | TOT ADJ PTS | EFF. BASE RATE | REPL. COST NEW | AYB | EYB | ECON | FNCT | | NORM | % COND |
|---|---|---|---|---|---|---|---|---|---|---|---|---|
| 0500 | 01 | 2,244 | 127.7430 | 191.61 | 429,973 | 2017 | 2017 | 0 | 0 | 0 | 2.80 | 97.20 |

1 SFR CUST – 100% - 2018 Heated Area: 1986 HX Base Yr 2018

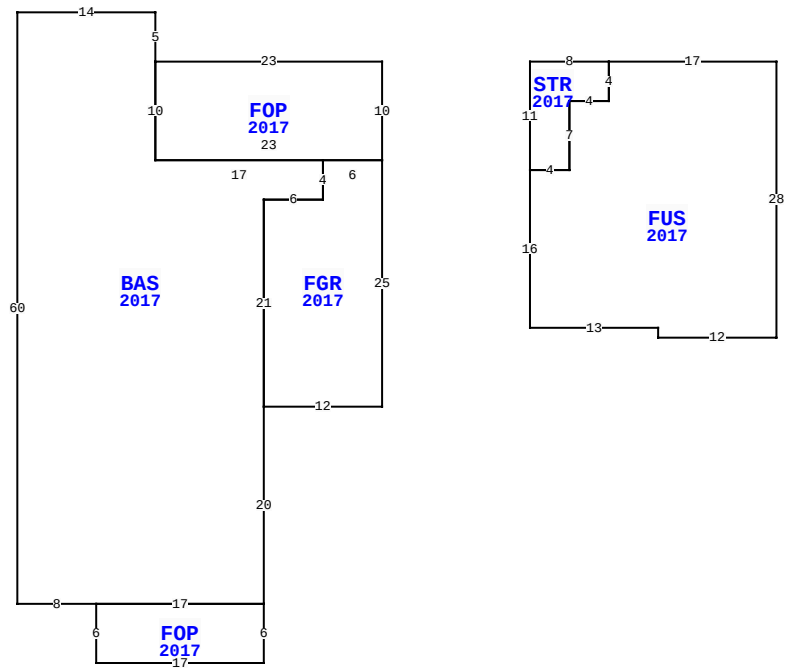


2135 SHELL COVE CR, FERNANDINA BEACH

| | | | |
|---|---|---|---|
| BLD DATE | | LGL DATE | |
| XF DATE | | LAND DATE | 03/26/2024 MLU |
| INC DATE | | AG DATE | |

## NASSAU COUNTY PROPERTY

PAGE 1 of 1 2

### VALUATION SUMMARY

| | | |
|---|---|---|
| VALUATION BY | | STANDARD |
| Tax Group: 2 | Tax Dist: | |
| BUILDING MARKET VALUE | | 417,934 |
| TOTAL MARKET OB/XF VALUE | | 3,259 |
| TOTAL LAND VALUE - MARKET | | 140,000 |
| TOTAL MARKET VALUE | | 561,193 |
| SOH/AGL Deduction | | 222,700 |
| ASSESSED VALUE | | 338,493 |
| TOTAL EXEMPTION VALUE | HX HB WX | 55,000 |
| BASE TAXABLE VALUE | | 283,493 |
| TOTAL JUST VALUE | | 561,193 |
| NCON VALUE | | 0 |
| INCOME VALUE | | |
| PREVIOUS YEAR MKT VALUE | | 502,339 |

| PERMIT NUM | DESCRIPTION | AMT | ISSUED |
|---|---|---|---|
| 20171623 | NEW CONSTR | 245,829 | 05/26/2017 |

## SALES DATA

| OFF RECORD Number | DATE | TYPE INST | Q U | V I | RSN CD | SALE PRICE |
|---|---|---|---|---|---|---|
| 2159/1227 | 11/21/2017 | SW | Q | I | 01 | 361,700 |
| GRANTOR: ARTISAN HOMES LLC | | | | | | |
| GRANTEE: HODGES PAMELA J | | | | | | |
| 2093/1376 | 1/09/2017 | SW | Q | V | 05 | 493,500 |
| GRANTOR: ROBINSON CREEK 34 LLC | | | | | | |
| GRANTEE: ARTISAN HOMES LLC | | | | | | |

## BUILDING NOTES

## BUILDING DIMENSIONS

FOP=[YR=2017] W23 BAS=[YR=2017] N5 W14 S60 E8 FOP=[YR=2017] S6 E17 N6 W17$ E17 N20 FGR=[YR=2017] E12 N25 W6 S4 W6 S21$ N21 E6 N4 W17 N10$ S10 E23 N10$ PTR=E15 STR=[YR=2017] E8 FUS=[YR=2017] E17 S28 W12 N1 W13 N16 E4 N7 E4 N4$ S4 W4 S7 W4 N11$ W15$.

## EXTRA FEATURES

| LN | OB/XF CODE | DESCRIPTION | BLD | CAP | L | W | UNITS | UT | Adj R | ADJ UNIT PRICE | ORIG COND | YEAR ON | YEAR ACTUAL | Q | % COND | OB/XF MKT VALUE | NOTES |
|---|---|---|---|---|---|---|---|---|---|---|---|---|---|---|---|---|---|
| 1 | 0855 | CONC PAVER | 0 | 100 | 0 | 0 | 480.00 | SF | 7.00 | 7.00 | 100 | 2017 | 2017 | 3 | 97 | 3,259 | |

## LAND DESCRIPTION

TOTAL OB/XF 3,259

| LN | USE CODE | CLS | LAND USE DESCRIPTION | CAP | RD | LOC ZONE | FRONT | DEPTH | TOT LND UTS | UNIT TYPE | DT | DPTH FACT | % COND | TOT ADJ | UNIT PRICE | ADJ UNIT PRICE | LAND VALUE | OTHER ADJUSTMENTS AND NOTES | YEAR | DENSITY | DECL | FRZ | YR | CONSRV |
|---|---|---|---|---|---|---|---|---|---|---|---|---|---|---|---|---|---|---|---|---|---|---|---|---|
| 1 | 000100 | C | SFR | 100 | | R-2 | 0.00 | 0.00 | 1.00 | LT | | 1.00 | 1.00 | 1.00 | 140,000.00 | 140,000.00 | 140,000 | | | | | | | |

REVIEW DATE 03/13/2024 BY KBA Total Acres: 0.00 Total Land Value: 140,000 Market: 0 Agricultural: 0 Common: 140,000 PRINTED 08/06/2024 BY SYS