BLOCK 4 LOT 11
IN OR 2081/197
NASSAU LAKES 1B REPLAT PB6/175

METZGER TRACI & STEVEN R
96240 CAYMAN CIR
FERNANDINA BEACH, FL 32034

2024

27-2N-28-141B-0004-0110

NASSAU COUNTY PROPERTY

BUILDING CHARACTERISTICS

ELEMENT	CD	CONSTRUCTION
Exterior Wall	10	ABOVE AVG 70
Exterior Wall	16	WD FR STUC 30
Roof Structur	03	GABLE/HIP 100
Roof Cover	03	COMP SHNGL 100
Interior Wall	05	DRYWALL 100
Interior Floo	12	HARDWOOD 80
Interior Floo	11	CLAY TILE 20
Air Condition	03	CENTRAL 100
Heating Type	04	AIR DUCTED 100
Bedrooms		4 100
Bathrooms		3 100
Frame	02	WOOD FRAME 100
Stories	1.5	1.5 100
Units		0 100
Occupancy	00	NONE 100
Quality	03	Quality Level 03
DOR CODE	0100	SINGLE FAMILY
MAP NUM		MKT AREA 04
NEIGHBORHOOD/LOC	4011.00	

AREA TYPE	TOTAL GROSS AREA	PCT OF BASE	TOT ADJ AREA	SUBAREA MARKET VALUE
BAS	2,234	100	2,234	267,480
FGR	682	55	375	44,899
FOP	30	30	9	1,077
FSP	171	40	68	8,142
FUS	544	100	544	65,134
TOTALS	3,661		3,230	386,732

MARKET ADJUSTMENTS

TYPE	MDL	EFF. AREA	TOT ADJ PTS	EFF. BASE RATE	REPL. COST NEW	AYB	EYB	ECON	FNCT		NORM	% COND
0900	01	3,230	105.4320	131.79	425,682	2004	2004	0	0	0	9.15	90.85

1 SNGL FAM – 100% - 2019 Heated Area: 2778 HX Base Yr 2019

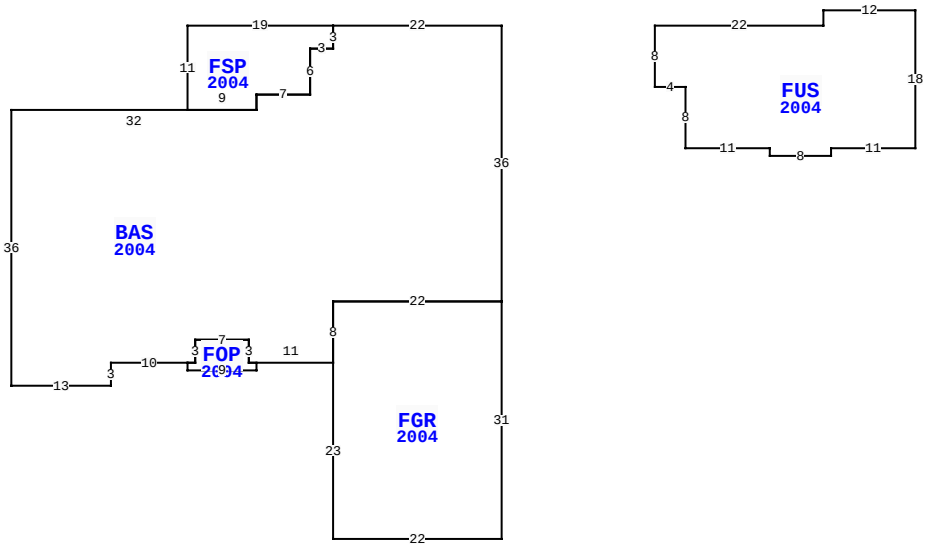

96240 CAYMAN CIR, FERNANDINA BEACH

BLD DATE		LGL DATE	
XF DATE		LAND DATE	05/18/2023 MLU
INC DATE		AG DATE	

VALUATION SUMMARY

VALUATION BY		STANDARD
Tax Group: 4	Tax Dist:	
BUILDING MARKET VALUE		412,739
TOTAL MARKET OB/XF VALUE		12,945
TOTAL LAND VALUE - MARKET		75,000
TOTAL MARKET VALUE		500,684
SOH/AGL Deduction		142,635
ASSESSED VALUE		358,049
TOTAL EXEMPTION VALUE	HX HB	50,000
BASE TAXABLE VALUE		308,049
TOTAL JUST VALUE		500,684
NCON VALUE		0
INCOME VALUE		
PREVIOUS YEAR MKT VALUE		483,876

PERMIT NUM	DESCRIPTION	AMT	ISSUED
B1805354	GARAGE	65,954	07/01/2018

SALES DATA

OFF RECORD Number	DATE	TYPE INST	Q / U	V / I	RSN CD	SALE PRICE
2081/0197	10/31/2016	WD	Q	I	01	318,400
GRANTOR: IRWIN JAMES S & STACY						
GRANTEE: METZGER TRACI & STE						
2021/0910	12/28/2015	WD	Q	I	01	275,000
GRANTOR: VAFIADIS THOMAS &						
GRANTEE: IRWIN JAMES S & STA						

BUILDING NOTES

BUILDING DIMENSIONS

BAS=[YR=2004] W22 FSP=[YR=2004] W19 S11 E9 N2 E7 N6 E3 N3$ S3 W3 S6 W7 S2 W32 S36 E13 N3 E10 FOP=[YR=2004] S1 E9 N1 W1 N3 W7 S3 W1$ E1 N3 E7 S3 E11 FGR=[YR=2004] S23 E22 N31 W22 S8$ N8 E22 N36$ PTR=E20 FUS=[YR=2004] E22 N2 E12 S18 W11 S1 W8 N1 W11 N8 W4 N8$ W20$.

EXTRA FEATURES

LN	OB/XF CODE	DESCRIPTION	BLD	CAP	L	W	UNITS	UT	Adj R	ADJ UNIT PRICE	ORIG COND	YEAR ON	YEAR ACTUAL	Q	% COND	OB/XF MKT VALUE	NOTES
1	0812	CONCRETE C	0	100	0	0	2,190.00	SF	4.00	4.00	100	2004	2004	3	84	7,358	
2	0812	CONCRETE C	0	100	120	12	1,440.00	SF	4.00	4.00	100	2018	2018	3	97	5,587	

LAND DESCRIPTION

TOTAL OB/XF 12,945

LN	USE CODE	CLS	LAND USE DESCRIPTION	CAP	RD	LOC ZONE	FRONT	DEPTH	TOT LND UTS	UNIT TYPE	DT	DPTH FACT	% COND	TOT ADJ	UNIT PRICE	ADJ UNIT PRICE	LAND VALUE	OTHER ADJUSTMENTS AND NOTES	YEAR	DENSITY	DECL	FRZ	YR	CONSRV
1	000100	C	SFR	100	0003	PUD	0.00	0.00	1.00	LT		1.00	1.00	1.00	75,000.00	75,000.00	75,000							

REVIEW DATE 07/24/2020 BY KWA Total Acres: 0.00 Total Land Value: 75,000 Market: 0 Agricultural: 0 Common: 75,000 PRINTED 08/06/2024 BY SYS

BLOCK 4 LOT 11
IN OR 2081/197
NASSAU LAKES 1B REPLAT PB6/175

METZGER TRACI & STEVEN R
96240 CAYMAN CIR
FERNANDINA BEACH, FL 32034

2024

27-2N-28-141B-0004-0110

NASSAU COUNTY PROPERTY

BUILDING CHARACTERISTICS

ELEMENT	CD	CONSTRUCTION
Exterior Wall	25	MOD METAL 100
Roof Structur	10	STEEL FRME 100
Roof Cover	12	MODULAR MT 100
Interior Wall	07	NONE 100
Interior Floo	03	CONC FINSH 100
Air Condition	01	NONE 100
Heating Type	01	NONE 100
Bedrooms		0 100
Bathrooms		0 100
Frame	05	STEEL 100
Stories	1.	1. 100
Units		0 100
Occupancy	00	NONE 100
Quality	06	Quality Level 06

DOR CODE 0100 SINGLE FAMILY
MAP NUM | MKT AREA 04
NEIGHBORHOOD/LOC 4011.00

AREA TYPE	TOTAL GROSS AREA	PCT OF BASE	TOT ADJ AREA	SUBAREA MARKET VALUE
BAS	1,200	100	1,200	23,860
FOP	360	30	108	2,147
TOTALS	1,560		1,308	26,007

MARKET ADJUSTMENTS

TYPE	MDL	EFF. AREA	TOT ADJ PTS	EFF. BASE RATE	REPL. COST NEW	AYB	EYB	ECON	FNCT		NORM	% COND
6500	01	1,308	59.8000	20.93	27,376	2018	2018	0	0	0	5.00	95.00

2 GARAGE RES – 100% - 2019 Heated Area: 1200 HX Base Yr 2019

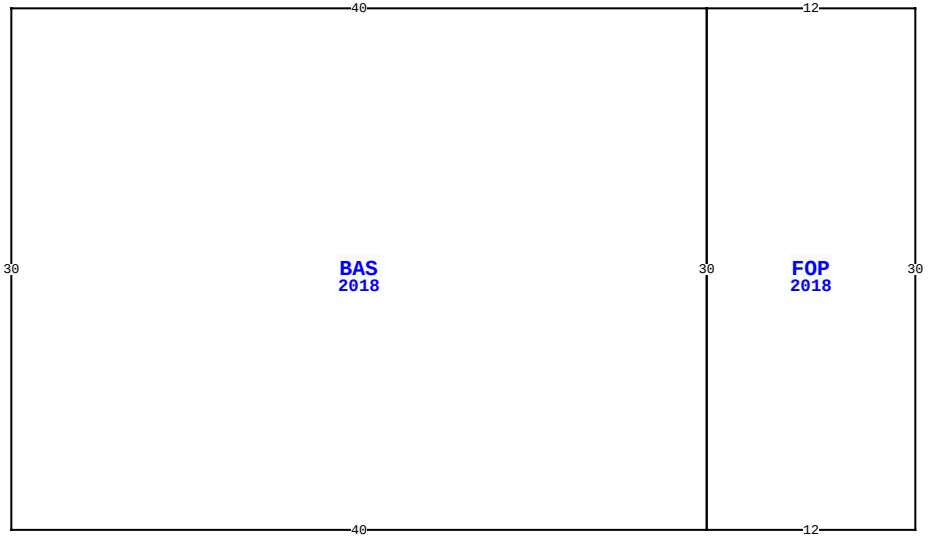

96240 CAYMAN CIR, FERNANDINA BEACH

BLD DATE		LGL DATE	
XF DATE		LAND DATE	05/18/2023 MLU
INC DATE		AG DATE	

VALUATION SUMMARY

VALUATION BY		STANDARD
Tax Group: 4	Tax Dist:	
BUILDING MARKET VALUE		412,739
TOTAL MARKET OB/XF VALUE		12,945
TOTAL LAND VALUE - MARKET		75,000
TOTAL MARKET VALUE		500,684
SOH/AGL Deduction		142,635
ASSESSED VALUE		358,049
TOTAL EXEMPTION VALUE	HX HB	50,000
BASE TAXABLE VALUE		308,049
TOTAL JUST VALUE		500,684
NCON VALUE		0
INCOME VALUE		
PREVIOUS YEAR MKT VALUE		483,876

PERMIT NUM	DESCRIPTION	AMT	ISSUED

SALES DATA

OFF RECORD Number	DATE	TYPE INST	Q / U	V / I	RSN CD	SALE PRICE
2081/0197	10/31/2016	WD	Q	I	01	318,400
GRANTOR: IRWIN JAMES S & STACY						
GRANTEE: METZGER TRACI & STE						
2021/0910	12/28/2015	WD	Q	I	01	275,000
GRANTOR: VAFIADIS THOMAS &						
GRANTEE: IRWIN JAMES S & STA						

BUILDING NOTES

BUILDING DIMENSIONS

BAS=[YR=2018] E40 FOP=[YR=2018] E12 S30 W12 N30$ S30 W40 N30$.

EXTRA FEATURES

L N	OB/XF CODE	DESCRIPTION	BLD	CAP	L	W	UNITS	UT	Adj R	ADJ UNIT PRICE	ORIG COND	YEAR ON	YEAR ACTUAL	Q	% COND	OB/XF MKT VALUE	NOTES

LAND DESCRIPTION

TOTAL OB/XF 0

L N	USE CODE	CLS	LAND USE DESCRIPTION	CAP	R D	LOC ZONE	FRONT	DEPTH	TOT LND UTS	UNIT TYPE	D T	DPTH FACT	% COND	TOT ADJ	UNIT PRICE	ADJ UNIT PRICE	LAND VALUE	OTHER ADJUSTMENTS AND NOTES	YEAR	DENSITY	DECL	FRZ	YR	CONSRV

REVIEW DATE 07/24/2020 BY KWA Total Acres: 0.00 Total Land Value: 75,000 Market: 0 Agricultural: 0 Common: 75,000 PRINTED 08/06/2024 BY SYS