BLOCK 2 LOT 2
NASSAU LAKES 1A PB 5/70 & 71

HUNTRESS HENRIKE H
96064 PARLIAMENT DR
FERNANDINA BEACH, FL 32034

2024

27-2N-28-141A-0002-0020

BUILDING CHARACTERISTICS

ELEMENT	CD	CONSTRUCTION
Exterior Wall	12	CEDAR 100
Roof Structur	03	GABLE/HIP 100
Roof Cover	03	COMP SHNGL 100
Interior Wall	05	DRYWALL 100
Interior Floo	14	CARPET 60
Interior Floo	12	HARDWOOD 40
Air Condition	03	CENTRAL 100
Heating Type	04	AIR DUCTED 100
Bedrooms		3 100
Bathrooms		2 100
Frame	02	WOOD FRAME 100
Stories	1.	1. 100
Units		0 100
BUD8 Adjustme	04	DIST 01 100
Occupancy	00	NONE 100
Quality	03	Quality Level 03
DOR CODE	0100	SINGLE FAMILY
MAP NUM		MKT AREA 04
NEIGHBORHOOD/LOC	4011.00	

AREA TYPE	TOTAL GROSS AREA	PCT OF BASE	TOT ADJ AREA	SUBAREA MARKET VALUE
BAS	2,286	100	2,286	250,399
FGR	550	55	302	33,080
FOP	189	30	57	6,244
FOP	279	30	84	9,201
TOTALS	3,304		2,729	298,924

MARKET ADJUSTMENTS

TYPE	MDL	EFF. AREA	TOT ADJ PTS	EFF. BASE RATE	REPL. COST NEW	AYB	EYB	ECON	FNCT		NORM	% COND
0900	01	2,729	107.5200	134.40	366,778	1986	1986	0	0	0	18.50	81.50

1 SNGL FAM – 0% - 2024 Heated Area: 2286 HX Base Yr

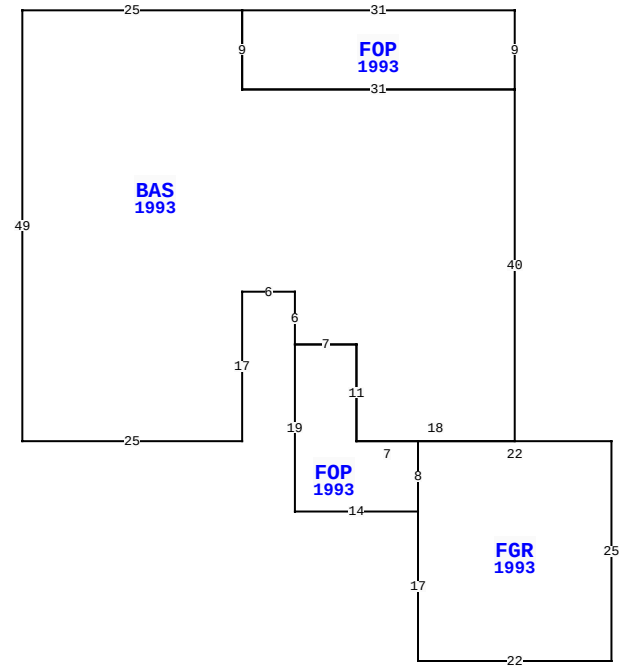

BLD DATE		LGL DATE	
XF DATE		LAND DATE	05/18/2023 MLU
INC DATE		AG DATE	

96064 PARLIAMENT DR, FERNANDINA BEACH

NASSAU COUNTY PROPERTY

PAGE 1 of 1 4

VALUATION SUMMARY

VALUATION BY	STANDARD
Tax Group: 4	Tax Dist:
BUILDING MARKET VALUE	298,924
TOTAL MARKET OB/XF VALUE	12,239
TOTAL LAND VALUE - MARKET	75,000
TOTAL MARKET VALUE	386,163
SOH/AGL Deduction	0
ASSESSED VALUE	386,163
TOTAL EXEMPTION VALUE	0
BASE TAXABLE VALUE	386,163
TOTAL JUST VALUE	386,163
NCON VALUE	0
INCOME VALUE	
PREVIOUS YEAR MKT VALUE	366,171

PERMIT NUM	DESCRIPTION	AMT	ISSUED
M2006853	H/AC	0	08/01/2020

SALES DATA

OFF RECORD Number	DATE	TYPE INST	Q / U	V / I	RSN CD	SALE PRICE
2684/663	12/11/2023	WD	Q	I	01	520,000
GRANTOR: CHASE RICHARD L						
GRANTEE: HUNTRESS HENRIKE H						
1957/1159	1/13/2015	QC	U	I	11	118,000
GRANTOR: CHASE RICHARD L & LOR						
GRANTEE: CHASE RICHARD L						

BUILDING NOTES

BUILDING DIMENSIONS

FOP=[YR=1993] W31 BAS=[YR=1993] W25 S49 E25 N17 E6 S6
FOP=[YR=1993] S19 E14 FGR=[YR=1993] S17 E22N25 W22 S8$ N8 W7
N11 W7$ E7 S11 E18 N40 W31 N9$ S9 E31 N9$.

EXTRA FEATURES

LN	OB/XF CODE	DESCRIPTION	BLD	CAP	L	W	UNITS	UT	Adj R	ADJ UNIT PRICE	ORIG COND	YEAR ON	YEAR ACTUAL	Q	% COND	OB/XF MKT VALUE	NOTES
1	0500	FP-PRE FAB	0	0	0	0	1.00	UT	3,500.00	3,500.00	100	1986	1986	3	60	2,100	
2	0810	CONCRETE A	0	0	20	16	320.00	SF	6.50	6.50	100	1986	1986	3	49.5	1,030	
3	0811	CONCRETE B	0	0	0	0	2,944.00	SF	5.20	5.20	100	1990	1990	3	59.5	9,109	

LAND DESCRIPTION

TOTAL OB/XF 12,239

LN	USE CODE	CLS	LAND USE DESCRIPTION	CAP	RD	LOC ZONE	FRONT	DEPTH	TOT LND UTS	UNIT TYPE	DT	DPTH FACT	% COND	TOT ADJ	UNIT PRICE	ADJ UNIT PRICE	LAND VALUE	OTHER ADJUSTMENTS AND NOTES	YEAR	DENSITY	DECL	FRZ	YR	CONSRV
1	000133	C	SFR LAKE	0		PUD	0.00	0.00	1.00	LT		1.00	1.00	1.00	75,000.00	75,000.00	75,000							

REVIEW DATE 05/12/2019 BY KBA Total Acres: 0.00 Total Land Value: 75,000 Market: 0 Agricultural: 0 Common: 75,000 PRINTED 08/06/2024 BY SYS