LOT 33
BEACHWAY @ NASSAU LAKE #1B
PB 6/303

GIRCYS KESTUTIS/GIRCIENE KAROLINA
96044 WATERWAY CT
FERNANDINA BEACH, FL 32034

2024

27-2N-28-014B-0033-0000

BUILDING CHARACTERISTICS

ELEMENT	CD	CONSTRUCTION
Exterior Wall	30	VINYL 70
Exterior Wall	16	WD FR STUC 30
Roof Structur	03	GABLE/HIP 100
Roof Cover	03	COMP SHNGL 100
Interior Wall	05	DRYWALL 100
Interior Floo	14	CARPET 60
Interior Floo	11	CLAY TILE 40
Air Condition	03	CENTRAL 100
Heating Type	04	AIR DUCTED 100
Bedrooms		5 100
Bathrooms		3 100
Frame	02	WOOD FRAME 100
Stories	2.	2. 100
Units		0 100
Occupancy	00	NONE 100
Quality	03	Quality Level 03
DOR CODE	0100	SINGLE FAMILY
MAP NUM		MKT AREA 04
NEIGHBORHOOD/LOC	4057.00	

AREA TYPE	TOTAL GROSS AREA	PCT OF BASE	TOT ADJ AREA	SUBAREA MARKET VALUE
BAS	2,062	100	2,062	252,345
FGR	420	55	231	28,269
FOP	26	30	8	979
FOP	180	30	54	6,609
FUS	400	100	400	48,951
TOTALS	3,088		2,755	337,154

MARKET ADJUSTMENTS

TYPE	MDL	EFF. AREA	TOT ADJ PTS	EFF. BASE RATE	REPL. COST NEW	AYB	EYB	ECON	FNCT		NORM	% COND
0900	01	2,755	108.5760	135.72	373,909	2003	2003	0	0	0	9.83	90.17

1 SNGL FAM – 100% - 2023 Heated Area: 2462 HX Base Yr 2023

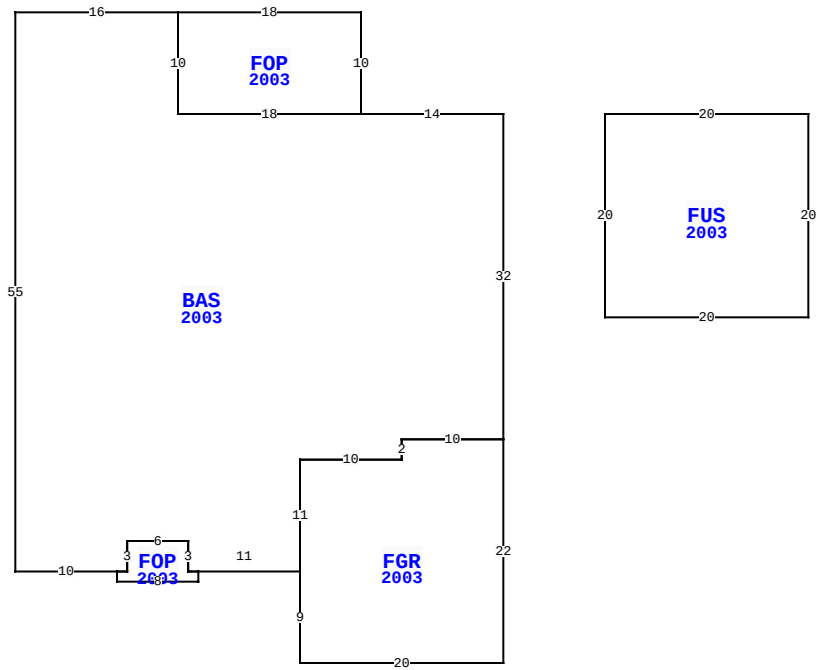

96044 WATERWAY CT, FERNANDINA BEACH

BLD DATE		LGL DATE	
XF DATE		LAND DATE	05/22/2023 MLU
INC DATE		AG DATE	

NASSAU COUNTY PROPERTY

PAGE 1 of 1 4

VALUATION SUMMARY

VALUATION BY		STANDARD
Tax Group: 4	Tax Dist:	
BUILDING MARKET VALUE		337,154
TOTAL MARKET OB/XF VALUE		3,548
TOTAL LAND VALUE - MARKET		75,000
TOTAL MARKET VALUE		415,702
SOH/AGL Deduction		3,030
ASSESSED VALUE		412,672
TOTAL EXEMPTION VALUE	HX HB	50,000
BASE TAXABLE VALUE		362,672
TOTAL JUST VALUE		415,702
NCON VALUE		0
INCOME VALUE		
PREVIOUS YEAR MKT VALUE		400,652

PERMIT NUM	DESCRIPTION	AMT	ISSUED
R1707904	REPAIR/RRF	10,000	12/01/2017
B0210539	NEW CONSTR	173,373	12/01/2002

SALES DATA

OFF RECORD Number	DATE	TYPE INST	Q / U	V / I	RSN CD	SALE PRICE
2329/0385	12/30/2019	WD	Q	I	01	256,000
GRANTOR: LUSARDI ROBERT J & DE						
GRANTEE: GIRCYS KESTUTIS & K						
1138/1093	5/20/2003	WD	Q	I		171,000
GRANTOR: KB HOME						
GRANTEE: LUSARDI ROBERT J &						

BUILDING NOTES

BUILDING DIMENSIONS

BAS=[YR=2003] W14 FOP=[YR=2003] N10 W18 S10 E18$ W18 N10 W16 S55 E10 FOP=[YR=2003] S1 E8 N1 W1 N3 W6 S3 W1$ E1 N3 E6 S3 E11 FGR=[YR=2003] S9 E20 N22 W10 S2 W10 S11$ N11 E10 N2 E10 N32$ PTR=E10 FUS=[YR=2003] E20 S20 W20 N20$ W10$.

EXTRA FEATURES

LN	OB/XF CODE	DESCRIPTION	BLD	CAP	L	W	UNITS	UT	Adj R	ADJ UNIT PRICE	ORIG COND	YEAR ON	YEAR ACTUAL	Q	% COND	OB/XF MKT VALUE	NOTES
1	0811	CONCRETE B	0	100	0	0	822.00	SF	5.20	5.20	100	2003	2003	3	83	3,548	

LAND DESCRIPTION

TOTAL OB/XF 3,548

LN	USE CODE	CLS	LAND USE DESCRIPTION	CAP	RD	LOC ZONE	FRONT	DEPTH	TOT LND UTS	UNIT TYPE	DT	DPTH FACT	% COND	TOT ADJ	UNIT PRICE	ADJ UNIT PRICE	LAND VALUE	OTHER ADJUSTMENTS AND NOTES	YEAR	DENSITY	DECL	FRZ	YR	CONSRV
1	000100	C	SFR	100		PUD	0.00	0.00	1.00	LT		1.00	1.00	1.00	75,000.00	75,000.00	75,000							

REVIEW DATE 05/12/2019 BY KBA Total Acres: 0.00 Total Land Value: 75,000 Market: 0 Agricultural: 0 Common: 75,000 PRINTED 08/06/2024 BY SYS