LOT 30
BEACHWAY @ NASSAU LAKE #1B
PB 6/303

BUTKINS DANIELLE M & CHRISTOPHER P
96672 ARRIGO BLVD
FERNANDINA BEACH, FL 32034

2024

27-2N-28-014B-0030-0000

NASSAU COUNTY PROPERTY

BUILDING CHARACTERISTICS

ELEMENT	CD	CONSTRUCTION
Exterior Wall	30	VINYL 70
Exterior Wall	16	WD FR STUC 30
Roof Structur	03	GABLE/HIP 100
Roof Cover	03	COMP SHNGL 100
Interior Wall	05	DRYWALL 100
Interior Floo	11	CLAY TILE 60
Interior Floo	12	HARDWOOD 40
Air Condition	03	CENTRAL 100
Heating Type	04	AIR DUCTED 100
Bedrooms		4 100
Bathrooms		3 100
Frame	02	WOOD FRAME 100
Stories	2.	2. 100
Units		0 100
Occupancy	00	NONE 100
Quality	03	Quality Level 03
DOR CODE	0100	SINGLE FAMILY
MAP NUM		MKT AREA 04
NEIGHBORHOOD/LOC	4057.00	

AREA TYPE	TOTAL GROSS AREA	PCT OF BASE	TOT ADJ AREA	SUBAREA MARKET VALUE
BAS	1,945	100	1,945	252,903
FGR	444	55	244	31,727
FOP	23	30	7	910
FUS	400	100	400	52,011
PTO	208	5	10	1,300
SFB	200	80	160	20,804
TOTALS	3,220		2,766	359,655

MARKET ADJUSTMENTS

TYPE	MDL	EFF. AREA	TOT ADJ PTS	EFF. BASE RATE	REPL. COST NEW	AYB	EYB	ECON	FNCT		NORM	% COND
0900	01	2,766	112.0320	140.04	387,351	2003	2008	0	0	0	7.15	92.85

1 SNGL FAM – 100% - 2021 Heated Area: 2505 HX Base Yr 2021

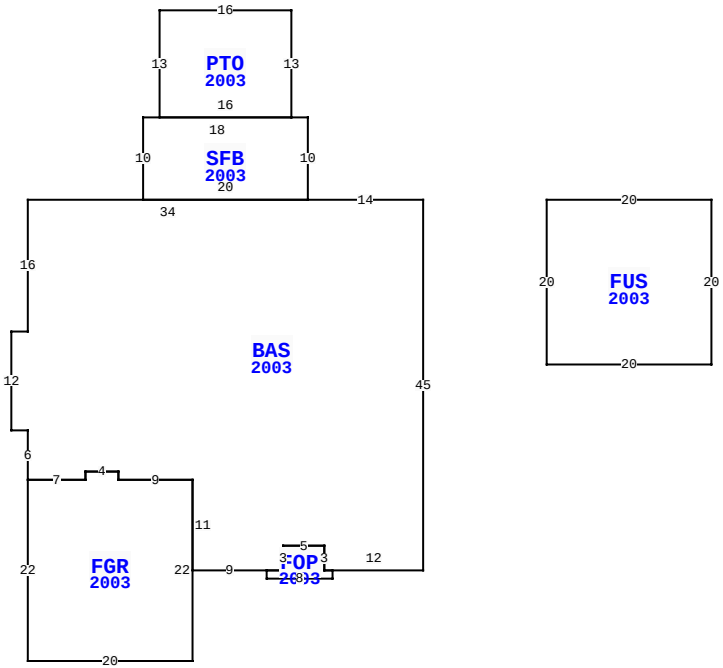

96672 ARRIGO BLVD, FERNANDINA BEACH

BLD DATE		LGL DATE	
XF DATE		LAND DATE	05/22/2023 MLU
INC DATE		AG DATE	

VALUATION SUMMARY

VALUATION BY		STANDARD
Tax Group: 4	Tax Dist:	
BUILDING MARKET VALUE		359,655
TOTAL MARKET OB/XF VALUE		3,587
TOTAL LAND VALUE - MARKET		75,000
TOTAL MARKET VALUE		438,242
SOH/AGL Deduction		144,410
ASSESSED VALUE		293,832
TOTAL EXEMPTION VALUE	HX HB VX	55,000
BASE TAXABLE VALUE		238,832
TOTAL JUST VALUE		438,242
NCON VALUE		0
INCOME VALUE		
PREVIOUS YEAR MKT VALUE		422,148

PERMIT NUM	DESCRIPTION	AMT	ISSUED
R1808061	REPAIR/RRF	18,200	08/07/2018
B0210485	CO ISSUED	0	06/27/2003
B0210485	NEW CONSTR	163,247	11/20/2002

SALES DATA

OFF RECORD Number	DATE	TYPE INST	Q / U	V / I	RSN CD	SALE PRICE
2388/0570	8/31/2020	WD	Q	I	01	346,000
GRANTOR: BURLINGAME BRYAN M TR						
GRANTEE: BUTKINS DANIELLE M						
2117/1509	5/03/2017	WD	U	I	11	100
GRANTOR: MARCHILLI MARILYN L R						
GRANTEE: BRYAN M BURLINGAME						

BUILDING NOTES

BUILDING DIMENSIONS

BAS=[YR=2003] W14 SFB=[YR=2003] N10 W2 PTO=[YR=2003] N13 W16 S13 E16 $ W18 S10 E20 $ W34 S16 W2 S12 E2 S6 FGR=[YR=2003] S22 E20 N22 W9 N1 W4 S1 W7 $ E7 N1 E4 S1 E9 S11 E9 FOP=[YR=2003] S1 E8 N1 W1 N3 W5 S3 W2 $ E2 N3 E5 S3 E12 N45 $ PTR= E15 FUS=[YR=2003] E20 S20 W20 N20 $ W15 $.

EXTRA FEATURES

LN	OB/XF CODE	DESCRIPTION	BLD	CAP	L	W	UNITS	UT	Adj R	ADJ UNIT PRICE	ORIG COND	YEAR ON	YEAR ACTUAL	Q	% COND	OB/XF MKT VALUE	NOTES
1	0811	CONCRETE B	0	100	0	0	831.00	SF	5.20	5.20	100	2003	2003	3	83	3,587	

LAND DESCRIPTION

TOTAL OB/XF 3,587

LN	USE CODE	CLS	LAND USE DESCRIPTION	CAP	RD	LOC ZONE	FRONT	DEPTH	TOT LND UTS	UNIT TYPE	DT	DPTH FACT	% COND	TOT ADJ	UNIT PRICE	ADJ UNIT PRICE	LAND VALUE	OTHER ADJUSTMENTS AND NOTES	YEAR	DENSITY	DECL	FRZ	YR	CONSRV
1	000100	C	SFR	100		PUD	0.00	0.00	1.00	LT		1.00	1.00	1.00	75,000.00	75,000.00	75,000							

REVIEW DATE 05/12/2019 BY KBA Total Acres: 0.00 Total Land Value: 75,000 Market: 0 Agricultural: 0 Common: 75,000 PRINTED 08/06/2024 BY SYS