LOT 28
BEACHWAY @ NASSAU LAKE #1B
PB 6/303

KNOPF JOHN & NICOLE
858 HERITAGE COURT
YORKTOWN HEIGHTS, NY 10598

2024

27-2N-28-014B-0028-0000

BUILDING CHARACTERISTICS

ELEMENT	CD	CONSTRUCTION
Exterior Wall	30	VINYL 70
Exterior Wall	16	WD FR STUC 30
Roof Structur	03	GABLE/HIP 100
Roof Cover	03	COMP SHNGL 100
Interior Wall	05	DRYWALL 100
Interior Floo	13	LVT/LAMNT 90
Interior Floo	11	CLAY TILE 10
Air Condition	03	CENTRAL 100
Heating Type	04	AIR DUCTED 100
Bedrooms		3 100
Bathrooms		2 100
Frame	02	WOOD FRAME 100
Stories	1.	1. 100
Units		0 100
Occupancy	00	NONE 100
Quality	03	Quality Level 03
DOR CODE	0100	SINGLE FAMILY
MAP NUM		MKT AREA 04
NEIGHBORHOOD/LOC	4057.00	

AREA TYPE	TOTAL GROSS AREA	PCT OF BASE	TOT ADJ AREA	SUBAREA MARKET VALUE
BAS	1,564	100	1,564	191,767
FGR	462	55	254	31,144
FOP	54	30	16	1,962
FOP	180	30	54	6,621
TOTALS	2,260		1,888	231,493

MARKET ADJUSTMENTS

TYPE	MDL	EFF. AREA	TOT ADJ PTS	EFF. BASE RATE	REPL. COST NEW	AYB	EYB	ECON	FNCT		NORM	% COND
0900	01	1,888	108.7800	135.98	256,730	2003	2003	0	0	0	9.83	90.17

1 SNGL FAM – 0% - 2023 Heated Area: 1564 HX Base Yr

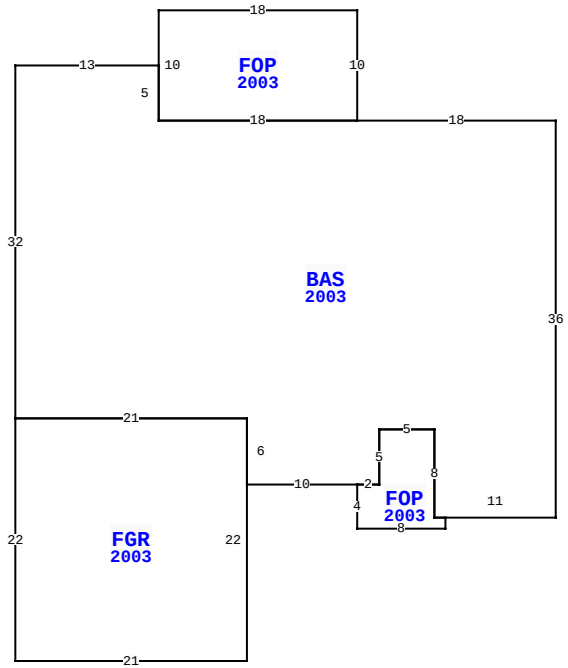

96694 ARRIGO BLVD, FERNANDINA BEACH

BLD DATE		LGL DATE	
XF DATE		LAND DATE	05/22/2023 MLU
INC DATE		AG DATE	

NASSAU COUNTY PROPERTY

PAGE 1 of 1 4

VALUATION SUMMARY

VALUATION BY	STANDARD
Tax Group: 4	Tax Dist:
BUILDING MARKET VALUE	231,493
TOTAL MARKET OB/XF VALUE	10,805
TOTAL LAND VALUE - MARKET	75,000
TOTAL MARKET VALUE	317,298
SOH/AGL Deduction	0
ASSESSED VALUE	317,298
TOTAL EXEMPTION VALUE	0
BASE TAXABLE VALUE	317,298
TOTAL JUST VALUE	317,298
NCON VALUE	0
INCOME VALUE	
PREVIOUS YEAR MKT VALUE	307,425

PERMIT NUM	DESCRIPTION	AMT	ISSUED
B0210066	NEW CONSTR	120,231	08/12/2002

SALES DATA

OFF RECORD Number	DATE	TYPE INST	Q U /	V I /	RSN CD	SALE PRICE
2565/1621	5/20/2022	WD	Q	I	01	390,000
GRANTOR: REED WILLIAM ERIC & H						
GRANTEE: KNOPF JOHN & NICOLE						
2079/1826	10/25/2016	WD	Q	I	01	201,500
GRANTOR: FOX BARRY S						
GRANTEE: REED WILLIAM ERIC &						

BUILDING NOTES

BUILDING DIMENSIONS

BAS=[YR=2003] W18 FOP=[YR=2003] N10 W18 S10 E18 $ W18 N5 W13 S32 FGR=[YR=2003] S22 E21 N22 W21 $ E21 S6 E10 FOP=[YR=2003] S4 E8 N1 W1 N8 W5 S5 W2 $ E2 N5 E5 S8 E11 N36 $.

EXTRA FEATURES

LN	OB/XF CODE	DESCRIPTION	BLD	CAP	L	W	UNITS	UT	Adj R	ADJ UNIT PRICE	ORIG COND	YEAR ON	YEAR ACTUAL	Q	% COND	OB/XF MKT VALUE	NOTES
1	0500	FP-PRE FAB	0	0	0	0	1.00	UT	3,500.00	3,500.00	100	2003	2003	3	87	3,045	
2	0811	CONCRETE B	0	0	0	0	819.00	SF	5.20	5.20	100	2003	2003	3	83	3,535	
3	0940	SHEDS/PORT	0	0	12	20	240.00	SF	30.00	30.00	100	2008	2008	3	35	2,520	
4	0476	VF 6 SBPL	0	0	0	0	72.00	LF	32.00	32.00	100	2008	2008	3	74	1,705	

LAND DESCRIPTION

TOTAL OB/XF 10,805

LN	USE CODE	CLS	LAND USE DESCRIPTION	CAP	RD	LOC ZONE	FRONT	DEPTH	TOT LND UTS	UNIT TYPE	DT	DPTH FACT	% COND	TOT ADJ	UNIT PRICE	ADJ UNIT PRICE	LAND VALUE	OTHER ADJUSTMENTS AND NOTES	YEAR	DENSITY	DECL	FRZ	YR	CONSRV
1	000100	C	SFR	0		PUD	0.00	0.00	1.00	LT		1.00	1.00	1.00	75,000.00	75,000.00	75,000							

REVIEW DATE 01/11/2023 BY DJA Total Acres: 0.00 Total Land Value: 75,000 Market: 0 Agricultural: 0 Common: 75,000 PRINTED 08/06/2024 BY SYS