LOT 5
THE TRAILS PB 6/296

**ROLDAN PRIE & JULIAN A**
55188 PEACEFUL TRAIL DR
CALLAHAN, FL 32011

**2024**

**27-2N-25-8600-0005-0000**

## NASSAU COUNTY PROPERTY



### BUILDING CHARACTERISTICS

| ELEMENT | CD | CONSTRUCTION |
|---|---|---|
| Exterior Wall | 16 | WD FR STUC 100 |
| Roof Structur | 03 | GABLE/HIP 100 |
| Roof Cover | 03 | COMP SHNGL 100 |
| Interior Wall | 05 | DRYWALL 100 |
| Interior Floo | 13 | LVT/LAMNT 80 |
| Interior Floo | 11 | CLAY TILE 20 |
| Air Condition | 03 | CENTRAL 100 |
| Heating Type | 04 | AIR DUCTED 100 |
| Bedrooms | | 5 100 |
| Bathrooms | | 3 100 |
| Frame | 02 | WOOD FRAME 100 |
| Stories | 1.5 | 1.5 100 |
| Units | | 0 100 |
| Occupancy | 00 | NONE 100 |
| Quality | 01 | Quality Level 01 |
| DOR CODE | 0100 | SINGLE FAMILY |
| MAP NUM | | MKT AREA 08 |
| NEIGHBORHOOD/LOC | 8023.00 | |

| AREA TYPE | TOTAL GROSS AREA | PCT OF BASE | TOT ADJ AREA | SUBAREA MARKET VALUE |
|---|---|---|---|---|
| BAS | 2,605 | 100 | 2,605 | 276,805 |
| FGR | 640 | 55 | 352 | 37,403 |
| FOP | 57 | 30 | 17 | 1,806 |
| FOP | 288 | 30 | 86 | 9,138 |
| FUS | 360 | 100 | 360 | 38,253 |
| PTO | 110 | 5 | 6 | 638 |
| TOTALS | 4,060 | | 3,426 | 364,043 |

### MARKET ADJUSTMENTS

| TYPE | MDL | EFF. AREA | TOT ADJ PTS | EFF. BASE RATE | REPL. COST NEW | AYB | EYB | ECON | FNCT | | NORM | % COND |
|---|---|---|---|---|---|---|---|---|---|---|---|---|
| 0900 | 01 | 3,426 | 92.9016 | 116.13 | 397,861 | 2006 | 2006 | 0 | 0 | 0 | 8.50 | 91.50 |

1 SNGL FAM – 0% - 0 Heated Area: 2965 HX Base Yr

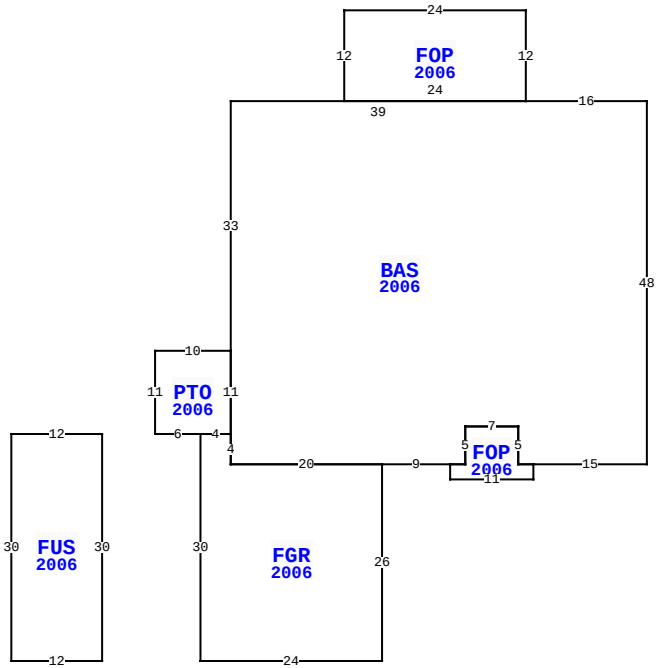


55188 PEACEFUL TRAIL DR, CALLAHAN

| | | | |
|---|---|---|---|
| BLD DATE | | LGL DATE | |
| XF DATE | | LAND DATE | |
| INC DATE | | AG DATE | |

### VALUATION SUMMARY

| | |
|---|---|
| VALUATION BY | STANDARD |
| Tax Group: 6 | Tax Dist: |
| BUILDING MARKET VALUE | 364,043 |
| TOTAL MARKET OB/XF VALUE | 73,062 |
| TOTAL LAND VALUE - MARKET | 50,000 |
| TOTAL MARKET VALUE | 487,105 |
| SOH/AGL Deduction | 49,058 |
| ASSESSED VALUE | 438,047 |
| TOTAL EXEMPTION VALUE | 0 |
| BASE TAXABLE VALUE | 438,047 |
| TOTAL JUST VALUE | 487,105 |
| NCON VALUE | 57,690 |
| INCOME VALUE | |
| PREVIOUS YEAR MKT VALUE | 404,064 |

18X36 FINISHED WD STRG W/ FUS (STRG) - ADJSTD FOR

| PERMIT NUM | DESCRIPTION | AMT | ISSUED |
|---|---|---|---|
| B2309739 | INGROUND POOL | 40,000 | 07/28/2023 |
| B1428555 | GARAGE | 0 | 04/03/2014 |
| B17762 | NEW CONSTR | 226,170 | 11/27/2006 |
| R09302 | REPAIR/RRF | 4,300 | 05/01/2006 |

### SALES DATA

| OFF RECORD Number | DATE | TYPE INST | Q / U | V / I | RSN CD | SALE PRICE |
|---|---|---|---|---|---|---|
| 2525/0851 | 12/20/2021 | WD | Q | I | 01 | 445,000 |
| GRANTOR: KENNEDY PIERRE R | | | | | | |
| GRANTEE: ROLDAN PRIE & JULIA | | | | | | |
| 1481/0335 | 2/26/2007 | WD | Q | I | | 337,000 |
| GRANTOR: FIRST COAST HOME CONS | | | | | | |
| GRANTEE: KENNEDY PIERRE R & | | | | | | |

### BUILDING NOTES

### BUILDING DIMENSIONS

BAS=[YR=2006;ORIG=0,0] W16 W39 S33 S11 S4 E20 E9 E2 N5 E7 S5 E2 E15 N48 $
FGR=[YR=2006;ORIG=-59,44] S30 E24 N26 W20 N4 W4 $
FUS=[YR=2006;ORIG=-84,44] E12 S30 W12 N30 $
FOP=[YR=2006;ORIG=-16,0] N12 W24 S12 E24 $
PTO=[YR=2006;ORIG=-55,33] W10 S11 E6 E4 N11 $
FOP=[YR=2006;ORIG=-26,48] S2 E11 N2 W2 N5 W7 S5 W2 $
PTR=[ORIG=0,0] E15 W15 $
.

### EXTRA FEATURES

| LN | OB/XF CODE | DESCRIPTION | BLD | CAP | L | W | UNITS | UT | Adj R | ADJ UNIT PRICE | ORIG COND | YEAR ON | YEAR ACTUAL | Q | % COND | OB/XF MKT VALUE | NOTES |
|---|---|---|---|---|---|---|---|---|---|---|---|---|---|---|---|---|---|
| 1 | 0812 | CONCRETE C | 0 | 0 | 0 | 0 | 3,900.00 | SF | 4.00 | 4.00 | 100 | 2006 | 2006 | 3 | 87 | 13,572 | |
| 2 | 0504 | FP-ELECTRI | 0 | 0 | 0 | 0 | 1.00 | UT | 2,000.00 | 2,000.00 | 100 | 2006 | 2006 | 3 | 90 | 1,800 | |
| 3 | 0940 | SHEDS/PORT | 0 | 0 | 36 | 18 | 648.00 | SF | 37.50 | 37.50 | 100 | 2024 | 2014 | | 65 | 15,795 | |
| 4 | 0861 | POOL GUNIT | 0 | 0 | 27 | 15 | 405.00 | SF | 85.00 | 85.00 | 100 | 2024 | 2023 | | 100 | 34,425 | |
| 5 | 0855 | CONC PAVER | 0 | 0 | 0 | 0 | 747.00 | SF | 10.00 | 10.00 | 100 | 2024 | 2023 | | 100 | 7,470 | |

### LAND DESCRIPTION

TOTAL OB/XF 73,062

| LN | USE CODE | CLS | LAND USE DESCRIPTION | CAP | RD | LOC ZONE | FRONT | DEPTH | TOT LND UTS | UNIT TYPE | DT | DPTH FACT | % COND | TOT ADJ | UNIT PRICE | ADJ UNIT PRICE | LAND VALUE | OTHER ADJUSTMENTS AND NOTES | YEAR | DENSITY | DECL | FRZ | YR | CONSRV |
|---|---|---|---|---|---|---|---|---|---|---|---|---|---|---|---|---|---|---|---|---|---|---|---|---|
| 1 | 000100 | C | SFR | 0 | 0006 | OR | 0.00 | 0.00 | 1.00 | LT | | 1.00 | 1.00 | 1.00 | 50,000.00 | 50,000.00 | 50,000 | | | | | | | |

REVIEW DATE 01/17/2024 BY KW Total Acres: 0.00 Total Land Value: 50,000 Market: 0 Agricultural: 0 Common: 50,000 PRINTED 08/06/2024 BY SYS