PT GOVT LOT 4 OF SEC 27-2N-23E
IN OR 2072/174

FOLTZ MARSHALL R & ELIZABETH H
19484 KENNY CONNER RD
HILLIARD, FL 32046

2024

27-2N-23-0000-0006-0000

BUILDING CHARACTERISTICS

ELEMENT	CD	CONSTRUCTION
Exterior Wall	06	BD/BATTEN 100
Roof Structur	03	GABLE/HIP 100
Roof Cover	12	MODULAR MT 100
Interior Wall	05	DRYWALL 100
Interior Floo	14	CARPET 80
Interior Floo	12	HARDWOOD 20
Air Condition	03	CENTRAL 100
Heating Type	04	AIR DUCTED 100
Bedrooms		2 100
Bathrooms		2 100
Frame	02	WOOD FRAME 100
Stories	1.	1. 100
Units		0 100
BUD8 Adjustme	06	DIST 1D 100
Occupancy	00	NONE 100
Quality	06	Quality Level 06
DOR CODE	0100	SINGLE FAMILY
MAP NUM		MKT AREA 09
NEIGHBORHOOD/LOC	9001.00	

AREA TYPE	TOTAL GROSS AREA	PCT OF BASE	TOT ADJ AREA	SUBAREA MARKET VALUE
BAS	1,569	100	1,569	124,832
FEP	561	80	449	35,723
FGR	780	55	429	34,132
FOP	32	30	10	795
UST	210	45	94	7,479
TOTALS	3,152		2,551	202,962

MARKET ADJUSTMENTS

TYPE	MDL	EFF. AREA	TOT ADJ PTS	EFF. BASE RATE	REPL. COST NEW	AYB	EYB	ECON	FNCT		NORM	% COND
0100	01	2,551	115.9200	110.12	280,916	1966	1986	0	0	0	27.75	72.25

1 SINGLE FAM – 100% - 2017 Heated Area: 1569 HX Base Yr 2017

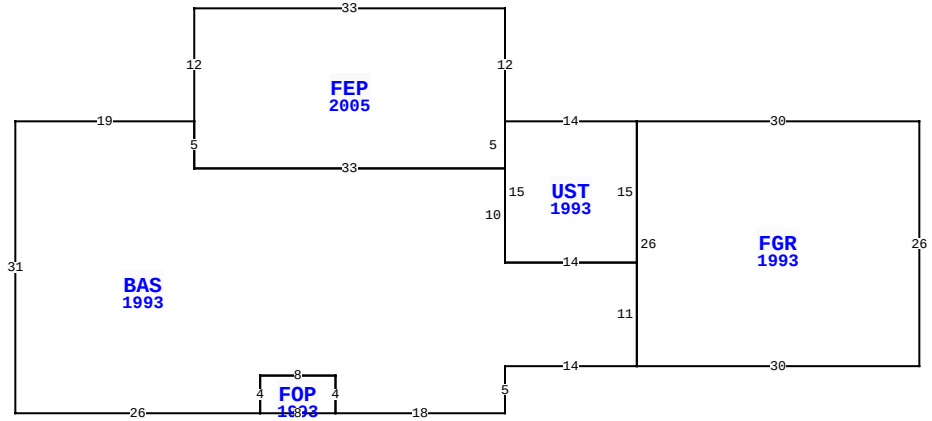

19484 KENNY CONNER RD, HILLIARD

BLD DATE		LGL DATE	
XF DATE		LAND DATE	06/16/2023 MLU
INC DATE		AG DATE	

EXTRA FEATURES

LN	OB/XF CODE	DESCRIPTION	BLD	CAP	L	W	UNITS	UT	Adj R	ADJ UNIT PRICE	ORIG COND	YEAR ON	YEAR ACTUAL	Q	% COND	OB/XF MKT VALUE	NOTES
1	0811	CONCRETE B	0	100	0	0	674.00	SF	5.20	5.20	100	1990	1990	3	59.5	2,085	
2	1076	TRELLIS A	0	100	0	0	180.00	SF	7.50	7.50	100	1995	1995	3	20	270	

NASSAU COUNTY PROPERTY

PAGE 1 of 1 6

VALUATION SUMMARY

VALUATION BY		STANDARD
Tax Group: 6	Tax Dist:	
BUILDING MARKET VALUE		202,962
TOTAL MARKET OB/XF VALUE		2,355
TOTAL LAND VALUE - MARKET		82,500
TOTAL MARKET VALUE		287,817
SOH/AGL Deduction		175,551
ASSESSED VALUE		112,266
TOTAL EXEMPTION VALUE	HX HB	50,000
BASE TAXABLE VALUE		62,266
TOTAL JUST VALUE		287,817
NCON VALUE		0
INCOME VALUE		
PREVIOUS YEAR MKT VALUE		279,770

PERMIT NUM	DESCRIPTION	AMT	ISSUED
R1614867	REPAIR/RRF	12,000	03/01/2016
6576	XFOB	12,750	06/29/1990

SALES DATA

OFF RECORD Number	DATE	TYPE INST	Q / U	V / I	RSN CD	SALE PRICE
2072/0174	9/15/2016	WD	Q	I	01	169,000
GRANTOR: CONNER BILLIE SUE & J						
GRANTEE: FOLTZ MARSHALL R &						
2072/0173	8/12/2016	WD	U	I	11	100
GRANTOR: HILL FLORENCE R						
GRANTEE: CONNER JAMES L & BI						

BUILDING NOTES

BUILDING DIMENSIONS

FGR=[YR=1993] W30 UST=[YR=1993] W14 FEP=[YR=2005] N12 W33 S12 BAS=[YR=1993] W19 S31 E26 FOP=[YR=1993] E8 N4 W8 S4 $ N4 E8 S4 E18 N5 E14 N11 W14 N10 W33 N5 $ S5 E33 N5 $ S15 E14 N15 $ S26 E30 N26 $.

LAND DESCRIPTION

TOTAL OB/XF 2,355

LN	USE CODE	CLS	LAND USE DESCRIPTION	CAP	RD	LOC ZONE	FRONT	DEPTH	TOT LND UTS	UNIT TYPE	DT	DPTH FACT	% COND	TOT ADJ	UNIT PRICE	ADJ UNIT PRICE	LAND VALUE	OTHER ADJUSTMENTS AND NOTES	YEAR	DENSITY	DECL	FRZ	YR	CONSRV
1	000115	C	SFR ACRES	100	0005	OR	0.00	0.00	3.30	AC		1.00	1.00	1.00	25,000.00	25,000.00	82,500							

REVIEW DATE 10/13/2020 BY TWA Total Acres: 3.30 Total Land Value: 82,500 Market: 0 Agricultural: 0 Common: 82,500 PRINTED 08/06/2024 BY SYS