PT LOTS 10 & 11
IN OR 2295/778
CORNWALL SURVEY OF

BENNETT EMMA & ANDREW ET AL/DOBRIE JACK
373228 KINGS FERRY RD
HILLIARD, FL 32046

2024

26-4N-24-2020-0010-0050

BUILDING CHARACTERISTICS

ELEMENT	CD	CONSTRUCTION
Exterior Wall	19	COMMON BRK 90
Exterior Wall	26	AL SIDING 10
Roof Structur	03	GABLE/HIP 100
Roof Cover	12	MODULAR MT 100
Interior Wall	05	DRYWALL 100
Interior Floo	14	CARPET 90
Interior Floo	08	SHT VINYL 10
Air Condition	03	CENTRAL 100
Heating Type	04	AIR DUCTED 100
Bedrooms		3 100
Bathrooms		2 100
Frame	03	MASONRY 100
Stories	1.5	1.5 100
Units		0 100
BUD8 Adjustme	04	DIST 01 100
Occupancy	00	NONE 100
Quality	01	Quality Level 01
DOR CODE	0100	SINGLE FAMILY
MAP NUM		MKT AREA 09
NEIGHBORHOOD/LOC	9001.00	

AREA TYPE	TOTAL GROSS AREA	PCT OF BASE	TOT ADJ AREA	SUBAREA MARKET VALUE
BAS	2,100	100	2,100	179,580
FGR	748	55	411	35,146
FSP	308	40	123	10,518
FUS	928	100	928	79,358
PTO	30	5	2	171
UCP	624	20	125	10,689
UST	44	45	20	1,710
TOTALS	4,782		3,709	317,173

MARKET ADJUSTMENTS

TYPE	MDL	EFF. AREA	TOT ADJ PTS	EFF. BASE RATE	REPL. COST NEW	AYB	EYB	ECON	FNCT		NORM	% COND
0900	01	3,709	95.0130	118.77	440,518	1960	1985	0	0	0	28.00	72.00

1 SNGL FAM – 50% - 2019 Heated Area: 3028 HX Base Yr 2019

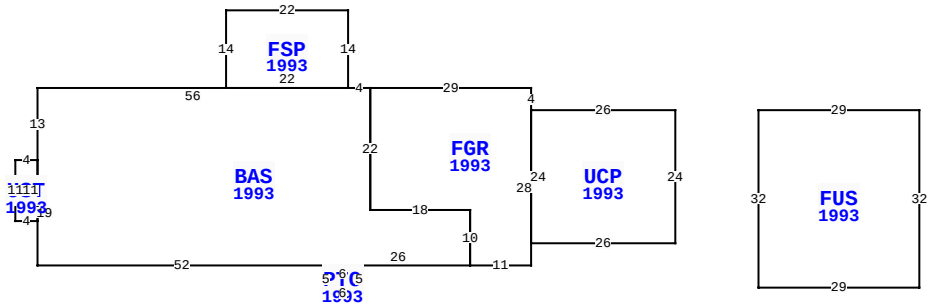

373228 KINGS FERRY RD, HILLIARD

BLD DATE		LGL DATE	
XF DATE		LAND DATE	06/13/2023 MLU
INC DATE		AG DATE	

NASSAU COUNTY PROPERTY

PAGE 1 of 1 4

VALUATION SUMMARY

VALUATION BY		STANDARD
Tax Group: 4	Tax Dist:	
BUILDING MARKET VALUE		317,173
TOTAL MARKET OB/XF VALUE		1,384
TOTAL LAND VALUE - MARKET		26,100
TOTAL MARKET VALUE		344,657
SOH/AGL Deduction		84,435
ASSESSED VALUE		260,222
TOTAL EXEMPTION VALUE	HA HAB	50,000
BASE TAXABLE VALUE		210,222
TOTAL JUST VALUE		344,657
NCON VALUE		0
INCOME VALUE		
PREVIOUS YEAR MKT VALUE		330,928

PERMIT NUM	DESCRIPTION	AMT	ISSUED
21003536	NEW ROOF	11,875	03/23/2021
5946	REPAIR/RRF	4,560	08/23/1989

SALES DATA

OFF RECORD Number	DATE	TYPE INST	Q U /	V I /	RSN CD	SALE PRICE
2295/0778	7/26/2019	QC	U	I	11	65,200
GRANTOR: DOBRIE JACK & EMMA DO						
GRANTEE: BENNETT ANDREW & EM						
2112/1200	4/07/2017	PR	U	I	19	150,000
GRANTOR: FRAZIER WILLIAM S,CUR						
GRANTEE: DOBRIE EMMA & JACK						

BUILDING NOTES

BUILDING DIMENSIONS

UCP=[YR=1993] W26 FGR=[YR=1993] N4 W29 BAS=[YR=1993] W4 FSP=[YR=1993] N14 W22 S14 E22$ W56 S13 UST=[YR=1993] W4 S11 E4 N11$ S19 E52 PTO=[YR=1993] S5 E6 N5 W6$ E26 N10 W18 N22$ S22 E18 S10 E11 N28$ S24 E26 N24$ PTR= E15 FUS=[YR=1993] E29 S32 W29 N32$ W15$.

EXTRA FEATURES

LN	OB/XF CODE	DESCRIPTION	BLD	CAP	L	W	UNITS	UT	Adj R	ADJ UNIT PRICE	ORIG COND	YEAR ON	YEAR ACTUAL	Q	% COND	OB/XF MKT VALUE	NOTES
1	0810	CONCRETE A	0	50	0	0	311.00	SF	6.50	6.50	100	1991	1991	3	62	1,253	
2	0825	BRICK	0	50	6	2	12.00	SF	12.50	12.50	100	1991	1991	3	87	131	

LAND DESCRIPTION

TOTAL OB/XF 1,384

LN	USE CODE	CLS	LAND USE DESCRIPTION	CAP	RD	LOC ZONE	FRONT	DEPTH	TOT LND UTS	UNIT TYPE	DT	DPTH FACT	% COND	TOT ADJ	UNIT PRICE	ADJ UNIT PRICE	LAND VALUE	OTHER ADJUSTMENTS AND NOTES	YEAR	DENSITY	DECL	FRZ	YR	CONSRV
1	000100	C	SFR	50	0006	OR	0.00	0.00	0.58	AC		1.00	1.00	1.50	30,000.00	45,000.00	26,100							

REVIEW DATE 07/20/2021 BY TWX Total Acres: 0.58 Total Land Value: 26,100 Market: 0 Agricultural: 0 Common: 26,100 PRINTED 08/06/2024 BY SYS