LOT 13
DECL COV & RESTR OR 1458/887
PRIVATE QUARTERS PB 7/175

SCARECROW ANSC OPERATING GROUP
1919 BLANDING BLVD
JACKSONVILLE, FL 32210

2024

26-2N-28-168P-0013-0000

BUILDING CHARACTERISTICS

ELEMENT	CD	CONSTRUCTION
Exterior Wall	16	WD FR STUC 100
Roof Structur	08	IRREGULAR 100
Roof Cover	03	COMP SHNGL 100
Interior Wall	05	DRYWALL 100
Interior Floo	13	LVT/LAMNT 100
Interior Kitch	05	NEW N/A 0
Air Condition	03	CENTRAL 100
Heating Type	04	AIR DUCTED 100
Bedrooms		3 100
Bathrooms		3.5 100
Frame	02	WOOD FRAME 100
Stories	2.	2. 100
Units		0 100
Quality	05	Quality Level 05
DOR CODE	0100	SINGLE FAMILY
MAP NUM		MKT AREA 04
NEIGHBORHOOD/LOC	4042.00	

AREA TYPE	TOTAL GROSS AREA	PCT OF BASE	TOT ADJ AREA	SUBAREA MARKET VALUE
BAS	1,572	100	1,572	176,033
FGR	150	55	82	9,182
FGR	478	55	263	29,451
FOP	36	30	11	1,232
FOP	60	30	18	2,016
FOP	63	30	19	2,128
FOP	133	30	40	4,479
FUS	963	100	963	107,837
TOTALS	3,455		2,968	332,357

MARKET ADJUSTMENTS

TYPE	MDL	EFF. AREA	TOT ADJ PTS	EFF. BASE RATE	REPL. COST NEW	AYB	EYB	ECON	FNCT		NORM	% COND
0320	01	2,968	117.8760	111.98	332,357	2023	2023	0	0	0	0.00	100.00

1 TOWNHOUSE - 0% - 2024 Heated Area: 2535 HX Base Yr

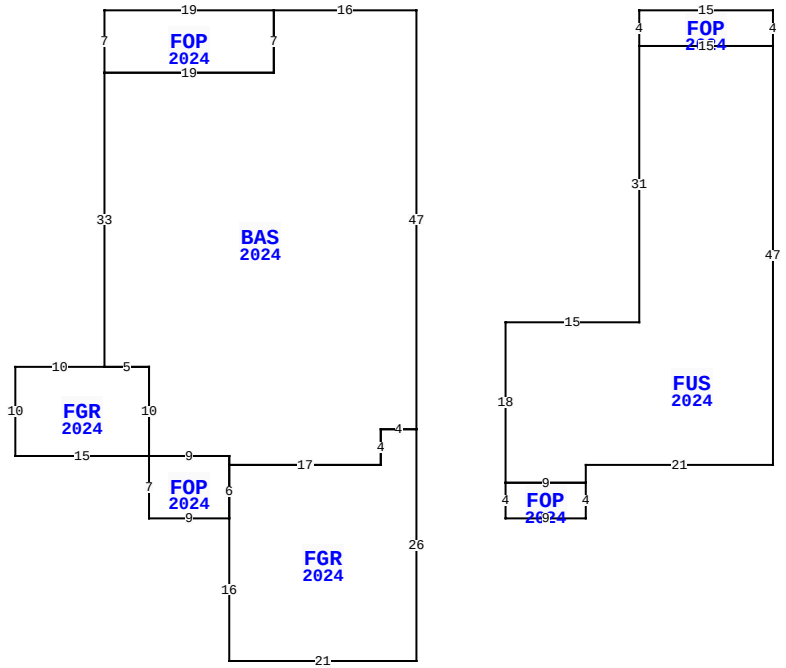

94028 HEMLOCK CT, FERNANDINA BEACH

BLD DATE		LGL DATE	
XF DATE		LAND DATE	04/18/2024 MLU
INC DATE		AG DATE	

NASSAU COUNTY PROPERTY

PAGE 1 of 1 4

VALUATION SUMMARY

VALUATION BY	STANDARD
Tax Group: 4	Tax Dist:
BUILDING MARKET VALUE	332,357
TOTAL MARKET OB/XF VALUE	12,890
TOTAL LAND VALUE - MARKET	115,000
TOTAL MARKET VALUE	460,247
SOH/AGL Deduction	49,000
ASSESSED VALUE	411,247
TOTAL EXEMPTION VALUE	0
BASE TAXABLE VALUE	411,247
TOTAL JUST VALUE	460,247
NCON VALUE	345,247
INCOME VALUE	
PREVIOUS YEAR MKT VALUE	60,000

PERMIT NUM	DESCRIPTION	AMT	ISSUED
	CO		11/21/2023
2301062	NEW CONSTR	472,203	01/25/2023

SALES DATA

OFF RECORD Number	DATE	TYPE INST	Q / U	V / I	RSN CD	SALE PRICE
2590/0232	9/08/2022	SW	U	V	30	750,300
GRANTOR: HEMLOCK LAND TRUST						
GRANTEE: SCARECROW ANSC OPER						
2480/0034	7/15/2021	WD	Q	V	05	220,000
GRANTOR: ADVANTAGE HOME BUILDE						
GRANTEE: HEMLOCK GC LAND TRU						

BUILDING NOTES

BUILDING DIMENSIONS

BAS=[YR=2024;ORIG=70,10] W16 S7 W19 S33 E5 S10 E9 S1 E17 N4 E4 N47 $
FOP=[YR=2024;ORIG=35,10] E19 S7 W19 N7 $
FGR=[YR=2024;ORIG=40,50] W5 W10 S10 E15 N10 $
FOP=[YR=2024;ORIG=40,60] S7 E9 N6 N1 W9 $
FGR=[YR=2024;ORIG=49,61] E17 N4 E4 S26 W21 N16 N6 $
FUS=[YR=2024;ORIG=110,14] W15 S31 W15 S18 E9 N2 E21 N47 $
FOP=[YR=2024;ORIG=110,10] W15 S4 E15 N4 $
FOP=[YR=2024;ORIG=80,63] E9 S4 W9 N4 $
.

EXTRA FEATURES

LN	OB/XF CODE	DESCRIPTION	BLD	CAP	L	W	UNITS	UT	Adj R	ADJ UNIT PRICE	ORIG COND	YEAR ON	YEAR ACTUAL	Q	% COND	OB/XF MKT VALUE	NOTES
1	0855	CONC PAVER	0	0	0	0	520.00	SF	10.00	10.00	100	2024	2023		100	5,200	
2	0855	CONC PAVER	0	0	0	0	464.00	SF	10.00	10.00	100	2024	2023		100	4,640	
3	0855	CONC PAVER	0	0	0	0	75.00	SF	10.00	10.00	100	2024	2023		100	750	
4	0855	CONC PAVER	0	0	0	0	170.00	SF	10.00	10.00	100	2024	2023		100	1,700	
5	1076	TRELLIS A	0	0	10	8	80.00	SF	7.50	7.50	100	2024	2023		100	600	

LAND DESCRIPTION

TOTAL OB/XF 12,890

LN	USE CODE	CLS	LAND USE DESCRIPTION	CAP	RD	LOC ZONE	FRONT	DEPTH	TOT LND UTS	UNIT TYPE	DT	DPTH FACT	% COND	TOT ADJ	UNIT PRICE	ADJ UNIT PRICE	LAND VALUE	OTHER ADJUSTMENTS AND NOTES	YEAR	DENSITY	DECL	FRZ	YR	CONSRV
1	000810	C	TOWNHOUSE1	0		PUD	0.00	0.00	1.00	LT		1.00	1.00	1.00	115,000.00	115,000.00	115,000							

REVIEW DATE 12/05/2023 BY DJ Total Acres: 0.00 Total Land Value: 115,000 Market: 0 Agricultural: 0 Common: 115,000 PRINTED 08/06/2024 BY SYS