LOT 297
FLORA PARKE UNIT 7B OR 2344/24

VACIRCA FRANK S & SUZANNE B
35148 MIMOSA PARKE PL
FERNANDINA BEACH, FL 32034

2024

26-2N-28-0557-0297-0000

NASSAU COUNTY PROPERTY

BUILDING CHARACTERISTICS

ELEMENT	CD	CONSTRUCTION
Exterior Wall	31	HARDIE BRD 100
Roof Structur	08	IRREGULAR 100
Roof Cover	03	COMP SHNGL 100
Interior Wall	05	DRYWALL 100
Interior Floo	13	LVT/LAMNT 50
Interior Floo	14	CARPET 50
Air Condition	03	CENTRAL 100
Heating Type	04	AIR DUCTED 100
Bedrooms		4 100
Bathrooms		3.5 100
Frame	02	WOOD FRAME 100
Stories	1.5	1.5 100
Units		0 100
Occupancy	00	NONE 100
Quality	03	Quality Level 03
DOR CODE	0100	SINGLE FAMILY
MAP NUM		MKT AREA 04
NEIGHBORHOOD/LOC	4041.00	

AREA TYPE	TOTAL GROSS AREA	PCT OF BASE	TOT ADJ AREA	SUBAREA MARKET VALUE
BAS	2,632	100	2,632	329,974
FGR	765	55	421	52,781
FOP	62	30	19	2,382
FSP	210	40	84	10,531
FUS	443	100	443	55,539
STR	77	10	8	1,003
TOTALS	4,189		3,607	452,210

MARKET ADJUSTMENTS

TYPE	MDL	EFF. AREA	TOT ADJ PTS	EFF. BASE RATE	REPL. COST NEW	AYB	EYB	ECON	FNCT		NORM	% COND
0900	01	3,607	100.8000	126.00	454,482	2021	2021	0	0	0	0.50	99.50

1 SNGL FAM – 100% - 2022 Heated Area: 3075 HX Base Yr 2022

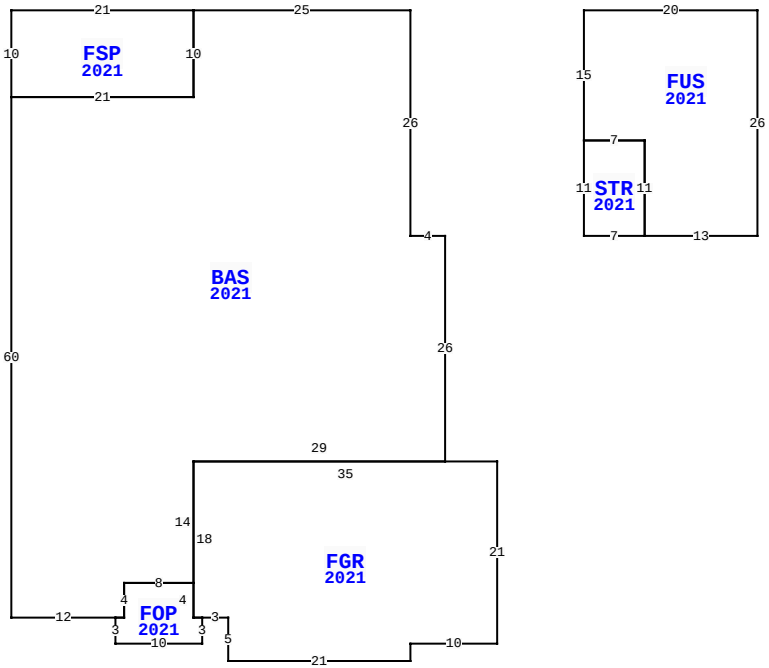

35148 MIMOSA PARKE PL, FERNANDINA BEACH

BLD DATE		LGL DATE	
XF DATE		LAND DATE	04/08/2024 MLU
INC DATE		AG DATE	

VALUATION SUMMARY

VALUATION BY		STANDARD
Tax Group: 4	Tax Dist:	
BUILDING MARKET VALUE		452,210
TOTAL MARKET OB/XF VALUE		46,826
TOTAL LAND VALUE - MARKET		75,000
TOTAL MARKET VALUE		574,036
SOH/AGL Deduction		125,767
ASSESSED VALUE		448,269
TOTAL EXEMPTION VALUE	HX HB	50,000
BASE TAXABLE VALUE		398,269
TOTAL JUST VALUE		574,036
NCON VALUE		0
INCOME VALUE		
PREVIOUS YEAR MKT VALUE		544,945

PERMIT NUM	DESCRIPTION	AMT	ISSUED
B2107482	FIBERGLAS SWIM PO	58,000	08/03/2021
C2009553	CO ISSUED	0	02/19/2021
B2009553	NEW CONSTR	420,588	10/12/2020

SALES DATA

OFF RECORD Number	DATE	TYPE INST	Q / U	V / I	RSN CD	SALE PRICE
2438/0491	2/25/2021	WD	Q	I	01	417,100
GRANTOR: SEDA CONSTRUCTION COM						
GRANTEE: VACIRCA FRANK S & S						
2398/0320	9/30/2020	WD	U	V	30	286,000
GRANTOR: FLORA PARKE DEVELOPME						
GRANTEE: SEDA CONSTRUCTION C						

BUILDING NOTES

BUILDING DIMENSIONS

BAS=[YR=2021] W25 FSP=[YR=2021] W21 S10 E21 N10$ S10 W21 S60 E12 FOP=[YR=2021] S3 E10 N3 FGR=[YR=2021] E3 S5 E21 N2 E10 N21 W35 S18 E1$ W1 N4 W8 S4 W1$ E1 N4 E8 N14 E29 N26 W4 N26$ PTR= E20 FUS=[YR=2021] E20 S26 W13 STR=[YR=2021] W7 N11 E7 S11$ N11 W7 N15$ W20 $.

EXTRA FEATURES

LN	OB/XF CODE	DESCRIPTION	BLD	CAP	L	W	UNITS	UT	Adj R	ADJ UNIT PRICE	ORIG COND	YEAR ON	YEAR ACTUAL	Q	% COND	OB/XF MKT VALUE	NOTES
1	0810	CONCRETE A	0	100	15	3	45.00	SF	6.50	6.50	100	2021	2021	3	99	290	
2	0811	CONCRETE B	0	100	0	0	779.00	SF	5.20	5.20	100	2021	2021	3	99	4,010	
3	0476	VF 6 SBPL	0	100	0	0	160.00	LF	32.00	32.00	100	2021	2021	3	98	5,018	
4	0470	VNYL GATE	0	100	0	0	2.00	UT	300.00	300.00	100	2021	2021	3	98	588	
5	0866	POOL FIBER	0	100	25	15	375.00	SF	72.00	72.00	100	2021	2021	3	93	25,110	
6	0855	CONC PAVER	0	100	0	0	1,005.00	SF	10.00	10.00	100	2021	2021	3	99	9,950	
7	0871	POOL HTR R	0	100	0	0	1.00	UT	2,000.00	2,000.00	100	2021	2021	3	93	1,860	

LAND DESCRIPTION

TOTAL OB/XF 46,826

LN	USE CODE	CLS	LAND USE DESCRIPTION	CAP	RD	LOC ZONE	FRONT	DEPTH	TOT LND UTS	UNIT TYPE	DT	DPTH FACT	% COND	TOT ADJ	UNIT PRICE	ADJ UNIT PRICE	LAND VALUE	OTHER ADJUSTMENTS AND NOTES	YEAR	DENSITY	DECL	FRZ	YR	CONSRV
1	000100	C	SFR	100		PUD	0.00	0.00	1.00	LT		1.00	1.00	1.00	75,000.00	75,000.00	75,000							

REVIEW DATE 01/04/2021 BY KW Total Acres: 0.00 Total Land Value: 75,000 Market: 0 Agricultural: 0 Common: 75,000 PRINTED 08/06/2024 BY SYS