LOT 184
FLORA PARKE UNIT 6B PBK 8/283

BIVINGS W TROY III TRUST/BIVINGS W TROY CO-TRUSTEE
32391 FERN PARKE WAY
FERNANDINA BEACH, FL 32097

2024

26-2N-28-0556-0184-0000

NASSAU COUNTY PROPERTY

BUILDING CHARACTERISTICS

ELEMENT	CD	CONSTRUCTION
Exterior Wall	16	WD FR STUC 100
Roof Structur	03	GABLE/HIP 100
Roof Cover	03	COMP SHNGL 100
Interior Wall	05	DRYWALL 100
Interior Floo	11	CLAY TILE 90
Interior Floo	14	CARPET 10
Air Condition	03	CENTRAL 100
Heating Type	04	AIR DUCTED 100
Bedrooms		3 100
Bathrooms		2.5 100
Frame	02	WOOD FRAME 100
Stories	1.5	1.5 100
Units		0 100
Occupancy	00	NONE 100
Quality	03	Quality Level 03
DOR CODE	0100	SINGLE FAMILY
MAP NUM		MKT AREA 04
NEIGHBORHOOD/LOC	4041.00	

AREA TYPE	TOTAL GROSS AREA	PCT OF BASE	TOT ADJ AREA	SUBAREA MARKET VALUE
BAS	2,606	100	2,606	336,434
FEP	210	80	168	21,689
FGR	734	55	404	52,157
FOP	42	30	13	1,678
FST	18	55	10	1,291
FUS	443	100	443	57,192
STR	77	10	8	1,033
UEP	315	60	189	24,399
TOTALS	4,445		3,841	495,872

MARKET ADJUSTMENTS

TYPE	MDL	EFF. AREA	TOT ADJ PTS	EFF. BASE RATE	REPL. COST NEW	AYB	EYB	ECON	FNCT		NORM	% COND
0900	01	3,841	105.9300	132.41	508,587	2018	2018	0	0	0	2.50	97.50

1 SNGL FAM – 100% - 2019 Heated Area: 3049 HX Base Yr 2019

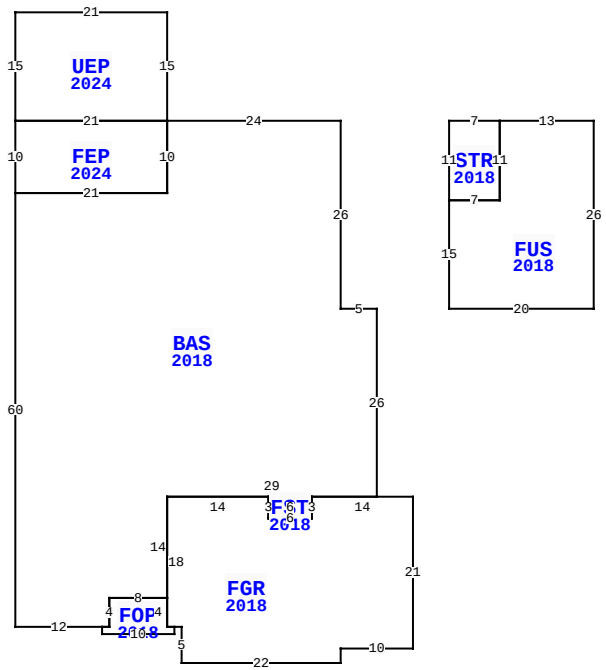

32391 FERN PARKE WAY, FERNANDINA BEACH

BLD DATE		LGL DATE	
XF DATE		LAND DATE	04/08/2024 MLU
INC DATE		AG DATE	

NASSAU COUNTY PROPERTY — VALUATION SUMMARY

VALUATION BY		STANDARD
Tax Group: 4	Tax Dist:	
BUILDING MARKET VALUE		495,872
TOTAL MARKET OB/XF VALUE		18,402
TOTAL LAND VALUE - MARKET		75,000
TOTAL MARKET VALUE		589,274
SOH/AGL Deduction		345,824
ASSESSED VALUE		243,450
TOTAL EXEMPTION VALUE	HX HB	50,000
BASE TAXABLE VALUE		193,450
TOTAL JUST VALUE		589,274
NCON VALUE		43,283
INCOME VALUE		
PREVIOUS YEAR MKT VALUE		515,313

PERMIT NUM	DESCRIPTION	AMT	ISSUED
B2206217	SUNROOM	9,431	04/21/2022
C1812165	CO ISSUED	0	12/13/2018
B1805797	NEW CONSTR	403,782	06/07/2018

SALES DATA

OFF RECORD Number	DATE	TYPE INST	Q U	V I	RSN CD	SALE PRICE
2246/1718	12/20/2018	WD	Q	I	01	410,500
GRANTOR: SEDA CONSTRUCTION COM						
GRANTEE: W TROY BIVINGS III						
2206/1470	6/26/2018	WD	U	V	30	63,000
GRANTOR: FLORA PARKE DEVELOPME						
GRANTEE: SEDA CONSTRUCTION C						

BUILDING NOTES

EXTRA FEATURES

LN	OB/XF CODE	DESCRIPTION	BLD	CAP	L	W	UNITS	UT	Adj R	ADJ UNIT PRICE	ORIG COND	YEAR ON	YEAR ACTUAL	Q	% COND	OB/XF MKT VALUE	NOTES
1	0811	CONCRETE B	0	100	0	0	880.00	SF	5.20	5.20	100	2018	2018	3	97	4,439	
2	0810	CONCRETE A	0	100	0	0	36.00	SF	6.50	6.50	100	2018	2018	3	97	227	
3	0476	VF 6 SBPL	0	100	0	0	180.00	LF	32.00	32.00	100	2018	2018	3	94	5,414	
4	0470	VNYL GATE	0	100	0	0	1.00	UT	300.00	300.00	100	2018	2018	3	94	282	
5	0855	CONC PAVER	1	100	0	0	444.00	SF	10.00	10.00	100	2024	2023		100	4,440	
6	0855	CONC PAVER	1	100	24	15	360.00	SF	10.00	10.00	100	2024	2023		100	3,600	

BUILDING DIMENSIONS

BAS=[YR=2018;ORIG=0,0] W24 S10 W21 S60 E12 E1 N4 E8 N14 E29 N26 W5 N26 $
FGR=[YR=2018;ORIG=-23,70] E1 S5 E22 N2 E10 N21 W14 S3 W6 N3 W14 S18 E1 $
FUS=[YR=2018;ORIG=22,0] E13 S26 W20 N15 E7 N11 $
FEP=[YR=2024;ORIG=-24,0] W21 S10 E21 N10 $
STR=[YR=2018;ORIG=15,0] E7 S11 W7 N11 $
FOP=[YR=2018;ORIG=-33,70] S1 E10 N1 W1 N4 W8 S4 W1 $
FST=[YR=2018;ORIG=-4,52] W6 S3 E6 N3 $
PTR=[ORIG=0,0] E15 W15 $
UEP=[YR=2024;ORIG=-45,-15] E21 S15 W21 N15 $
.

LAND DESCRIPTION

TOTAL OB/XF 18,402

LN	USE CODE	CLS	LAND USE DESCRIPTION	CAP	RD	LOC ZONE	FRONT	DEPTH	TOT LND UTS	UNIT TYPE	DT	DPTH FACT	% COND	TOT ADJ	UNIT PRICE	ADJ UNIT PRICE	LAND VALUE	OTHER ADJUSTMENTS AND NOTES	YEAR	DENSITY	DECL	FRZ	YR	CONSRV
1	000100	C	SFR	100		PUD	0.00	0.00	1.00	LT		1.00	1.00	1.00	75,000.00	75,000.00	75,000							

REVIEW DATE 03/29/2023 BY DJ Total Acres: 0.00 Total Land Value: 75,000 Market: 0 Agricultural: 0 Common: 75,000 PRINTED 08/06/2024 BY SYS