LOT 172
FLORA PARKE UNIT #6A PB 8/72

THORPE MARIAN H & GEORGE W
32333 JUNIPER PARKE DRIVE
FERNANDINA BEACH, FL 32034

**2024**

**26-2N-28-0554-0172-0000**

## BUILDING CHARACTERISTICS

| ELEMENT | CD | CONSTRUCTION |
|---|---|---|
| Exterior Wall | 16 | WD FR STUC 100 |
| Roof Structur | 08 | IRREGULAR 100 |
| Roof Cover | 03 | COMP SHNGL 100 |
| Interior Wall | 05 | DRYWALL 100 |
| Interior Floo | 11 | CLAY TILE 50 |
| Interior Floo | 14 | CARPET 50 |
| Air Condition | 03 | CENTRAL 100 |
| Heating Type | 04 | AIR DUCTED 100 |
| Bedrooms | | 4 100 |
| Bathrooms | | 3 100 |
| Frame | 02 | WOOD FRAME 100 |
| Stories | 2. | 2. 100 |
| Units | | 0 100 |
| Occupancy | 00 | NONE 100 |
| Quality | 05 | Quality Level 05 |
| DOR CODE | 0100 | SINGLE FAMILY |
| MAP NUM | | MKT AREA 04 |
| NEIGHBORHOOD/LOC | 4041.00 | |

| AREA TYPE | TOTAL GROSS AREA | PCT OF BASE | TOT ADJ AREA | SUBAREA MARKET VALUE |
|---|---|---|---|---|
| BAS | 2,616 | 100 | 2,616 | 360,818 |
| FGR | 752 | 55 | 414 | 57,102 |
| FOP | 42 | 30 | 13 | 1,793 |
| FSP | 200 | 40 | 80 | 11,034 |
| FUS | 443 | 100 | 443 | 61,102 |
| PTO | 140 | 5 | 7 | 966 |
| STR | 77 | 10 | 8 | 1,103 |
| TOTALS | 4,270 | | 3,581 | 493,918 |

## MARKET ADJUSTMENTS

| TYPE | MDL | EFF. AREA | TOT ADJ PTS | EFF. BASE RATE | REPL. COST NEW | AYB | EYB | ECON | FNCT | | NORM | % COND |
|---|---|---|---|---|---|---|---|---|---|---|---|---|
| 0900 | 01 | 3,581 | 114.3450 | 142.93 | 511,832 | 2016 | 2016 | 0 | 0 | 0 | 3.50 | 96.50 |

1 SNGL FAM – 100% - 2023 Heated Area: 3059 HX Base Yr 2023

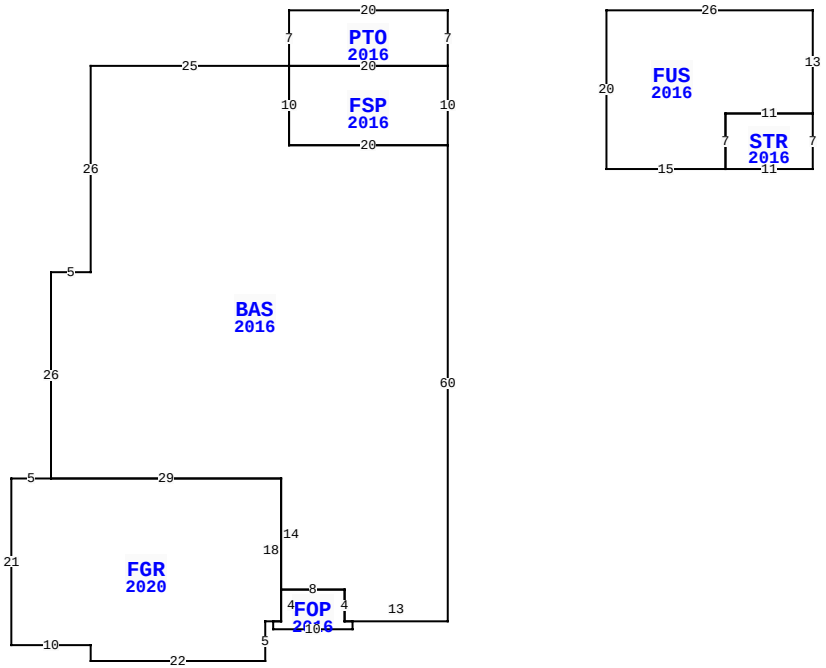


32333 JUNIPER PARKE DR, FERNANDINA BEACH

| | | | |
|---|---|---|---|
| BLD DATE | | LGL DATE | |
| XF DATE | | LAND DATE | 04/08/2024 MLU |
| INC DATE | | AG DATE | |

## NASSAU COUNTY PROPERTY

PAGE 1 of 1 4

### VALUATION SUMMARY

| | | |
|---|---|---|
| VALUATION BY | | STANDARD |
| Tax Group: 4 | Tax Dist: | |
| BUILDING MARKET VALUE | | 493,918 |
| TOTAL MARKET OB/XF VALUE | | 11,346 |
| TOTAL LAND VALUE - MARKET | | 75,000 |
| TOTAL MARKET VALUE | | 580,264 |
| SOH/AGL Deduction | | 15,633 |
| ASSESSED VALUE | | 564,631 |
| TOTAL EXEMPTION VALUE | HX HB | 50,000 |
| BASE TAXABLE VALUE | | 514,631 |
| TOTAL JUST VALUE | | 580,264 |
| NCON VALUE | | 0 |
| INCOME VALUE | | |
| PREVIOUS YEAR MKT VALUE | | 548,185 |

| PERMIT NUM | DESCRIPTION | AMT | ISSUED |
|---|---|---|---|
| B2003020 | (GARAGE DOORS) | 1,500 | 04/01/2020 |
| B1631753 | CO ISSUED | 0 | 07/18/2016 |
| B1632223 | SCRN ENCLSR | 2,678 | 05/01/2016 |
| B1631753 | NEW CONSTR | 382,910 | 02/04/2016 |

## SALES DATA

| OFF RECORD Number | DATE | TYPE INST | Q / U | V / I | RSN CD | SALE PRICE |
|---|---|---|---|---|---|---|
| 2603/1478 | 11/16/2022 | WD | Q | I | 02 | 760,000 |
| GRANTOR: MSHARAFIEH SHADI | | | | | | |
| GRANTEE: THORPE MARIAN H & G | | | | | | |
| 2455/0860 | 4/22/2021 | QC | U | I | 11 | 100 |
| GRANTOR: SAAB GHONWA | | | | | | |
| GRANTEE: MSHARAFIEH SHADI | | | | | | |

## BUILDING NOTES

## BUILDING DIMENSIONS

PTO=[YR=2016] W20 S7 BAS=[YR=2016] W25 S26 W5 S26
FGR=[YR=2020] W5 S21 E10 S2 E22 N5 E1 FOP=[YR=2016] S1 E10 N1 W1 N4 W8 S4 W1$ E1 N18 W29$ E29 S14 E8 S4 E13 N60
FSP=[YR=2016] N10 W20 S10 E20$ W20 N10$ E20 N7$ PTR=E20
FUS=[YR=2016] E26 S13 STR=[YR=2016] S7 W11 N7 E11$ W11 S7 W15 N20$ W20$.

## EXTRA FEATURES

| L N | OB/XF CODE | DESCRIPTION | BLD | CAP | L | W | UNITS | UT | Adj R | ADJ UNIT PRICE | ORIG COND | YEAR ON | YEAR ACTUAL | Q | % COND | OB/XF MKT VALUE | NOTES |
|---|---|---|---|---|---|---|---|---|---|---|---|---|---|---|---|---|---|
| 1 | 0855 | CONC PAVER | 0 | 100 | 0 | 0 | 948.00 | SF | 10.00 | 10.00 | 100 | 2016 | 2016 | 3 | 96 | 9,101 | |
| 2 | 0855 | CONC PAVER | 0 | 100 | 0 | 0 | 45.00 | SF | 10.00 | 10.00 | 100 | 2016 | 2016 | 3 | 96 | 432 | |
| 3 | 0911 | SCRN RM A | 0 | 100 | 0 | 0 | 140.00 | SF | 17.50 | 17.50 | 100 | 2016 | 2016 | 3 | 74 | 1,813 | |

## LAND DESCRIPTION

TOTAL OB/XF 11,346

| L N | USE CODE | CLS | LAND USE DESCRIPTION | CAP | R D | LOC ZONE | FRONT | DEPTH | TOT LND UTS | UNIT TYPE | D T | DPTH FACT | % COND | TOT ADJ | UNIT PRICE | ADJ UNIT PRICE | LAND VALUE | OTHER ADJUSTMENTS AND NOTES | YEAR | DENSITY | DECL | FRZ | YR | CONSRV |
|---|---|---|---|---|---|---|---|---|---|---|---|---|---|---|---|---|---|---|---|---|---|---|---|---|
| 1 | 000134 | C | SFR POND | 100 | | PUD | 0.00 | 0.00 | 1.00 | LT | | 1.00 | 1.00 | 1.00 | 75,000.00 | 75,000.00 | 75,000 | | | | | | | |

REVIEW DATE 07/22/2020 BY KWA Total Acres: 0.00 Total Land Value: 75,000 Market: 0 Agricultural: 0 Common: 75,000 PRINTED 08/06/2024 BY SYS