LOT 96
FLORA PARKE #5 PB 7/335

HAMILTON JOHN CLINTON & SHERRY
33146 PRAIRIE PARKE PL
FERNANDINA BEACH, FL 32034

2024

26-2N-28-0553-0096-0000

BUILDING CHARACTERISTICS

ELEMENT	CD	CONSTRUCTION
Exterior Wall	16	WD FR STUC 100
Roof Structur	08	IRREGULAR 100
Roof Cover	03	COMP SHNGL 100
Interior Wall	05	DRYWALL 100
Interior Floo	14	CARPET 70
Interior Floo	11	CLAY TILE 30
Air Condition	03	CENTRAL 100
Heating Type	04	AIR DUCTED 100
Bedrooms		4 100
Bathrooms		3 100
Frame	02	WOOD FRAME 100
Stories	1.5	1.5 100
Units		0 100
Occupancy	00	NONE 100
Quality	03	Quality Level 03

DOR CODE 0100 SINGLE FAMILY
MAP NUM | MKT AREA 04
NEIGHBORHOOD/LOC 4041.00

AREA TYPE	TOTAL GROSS AREA	PCT OF BASE	TOT ADJ AREA	SUBAREA MARKET VALUE
BAS	1,960	100	1,960	260,330
FGR	661	55	364	48,347
FOP	63	30	19	2,524
FSP	189	40	76	10,094
FUS	370	100	370	49,144
TOTALS	3,243		2,789	370,439

MARKET ADJUSTMENTS

TYPE	MDL	EFF. AREA	TOT ADJ PTS	EFF. BASE RATE	REPL. COST NEW	AYB	EYB	ECON	FNCT		NORM	% COND
0900	01	2,789	111.2640	139.08	387,894	2014	2014	0	0	0	4.50	95.50

1 SNGL FAM – 100% - 2022 Heated Area: 2330 HX Base Yr 2022

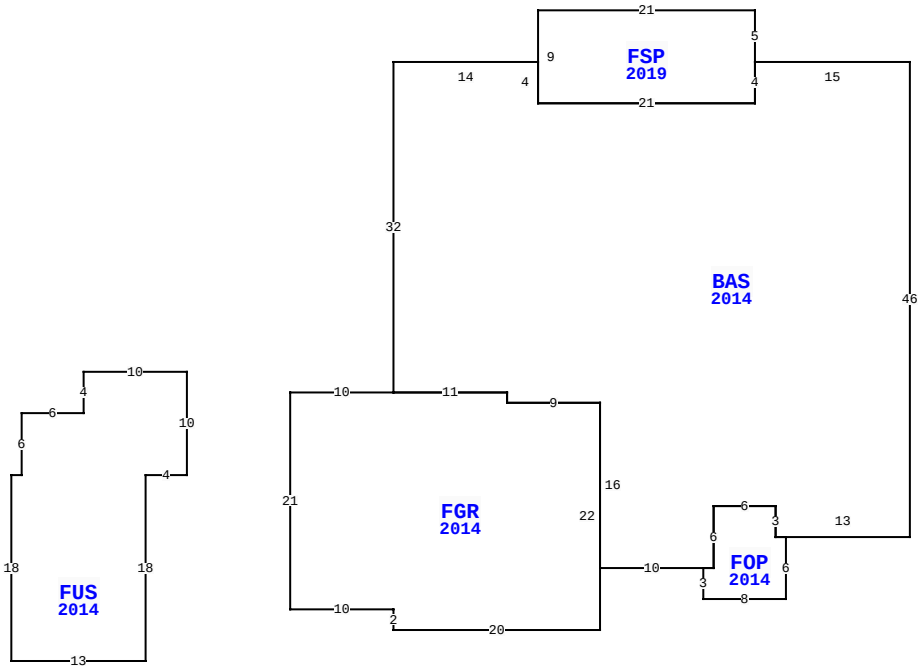

33146 PRAIRIE PARKE PL, FERNANDINA BEACH

BLD DATE		LGL DATE	
XF DATE		LAND DATE	04/08/2024 MLU
INC DATE		AG DATE	

NASSAU COUNTY PROPERTY

PAGE 1 of 1 4

VALUATION SUMMARY

VALUATION BY		STANDARD
Tax Group: 4	Tax Dist:	
BUILDING MARKET VALUE		370,439
TOTAL MARKET OB/XF VALUE		9,609
TOTAL LAND VALUE - MARKET		75,000
TOTAL MARKET VALUE		455,048
SOH/AGL Deduction		202,576
ASSESSED VALUE		252,472
TOTAL EXEMPTION VALUE	HX HB	50,000
BASE TAXABLE VALUE		202,472
TOTAL JUST VALUE		455,048
NCON VALUE		0
INCOME VALUE		
PREVIOUS YEAR MKT VALUE		428,415

PERMIT NUM	DESCRIPTION	AMT	ISSUED
B240006597	21.5 X 15.8 SCREE	11,042	06/04/2024
B1327403	CO ISSUED	0	04/11/2014
P1316742	NEW CONSTR	0	08/01/2013
B1327403	NEW CONSTR	281,535	07/01/2013

SALES DATA

OFF RECORD Number	DATE	TYPE INST	Q U	V I	RSN CD	SALE PRICE
2516/0351	11/23/2021	WD	Q	I	01	450,000
GRANTOR: WISNIEWSKI MICHAEL &						
GRANTEE: HAMILTON JOHN CLINT						
1949/1983	11/14/2014	WD	Q	I	02	269,000
GRANTOR: SEDA CONSTRUCTION COM						
GRANTEE: WISNIEWSKI MICHAEL						

BUILDING NOTES

BUILDING DIMENSIONS

BAS=[YR=2014] W15 FSP=[YR=2019] N5 W21 S9 E21 N4 $ S4 W21 N4 W14 S32 FGR=[YR=2014] W10 S21 E10 S2 E20 N22 W9 N1 W11 $ E11 S1 E9 S16 E10 FOP=[YR=2014] S3 E8 N6 W1 N3 W6 S6 W1 $ E1 N6 E6 S3 E13 N46 $ PTR= W70 S30 FUS=[YR=2014] W10 S4 W6 S6 W1 S18 E13 N18 E4 N10$ N30 E70$.

EXTRA FEATURES

LN	OB/XF CODE	DESCRIPTION	BLD	CAP	L	W	UNITS	UT	Adj R	ADJ UNIT PRICE	ORIG COND	YEAR ON	YEAR ACTUAL	Q	% COND	OB/XF MKT VALUE	NOTES
1	0500	FP-PRE FAB	0	100	0	0	1.00	UT	3,500.00	3,500.00	100	2014	2014	3	96	3,360	
2	0810	CONCRETE A	0	100	0	0	1,012.00	SF	6.50	6.50	100	2014	2014	3	95	6,249	

LAND DESCRIPTION

TOTAL OB/XF 9,609

LN	USE CODE	CLS	LAND USE DESCRIPTION	CAP	RD	LOC ZONE	FRONT	DEPTH	TOT LND UTS	UNIT TYPE	DT	DPTH FACT	% COND	TOT ADJ	UNIT PRICE	ADJ UNIT PRICE	LAND VALUE	OTHER ADJUSTMENTS AND NOTES	YEAR	DENSITY	DECL	FRZ	YR	CONSRV
1	000134	C	SFR POND	100		PUD	0.00	0.00	1.00	LT		1.00	1.00	1.00	75,000.00	75,000.00	75,000							

REVIEW DATE 05/11/2020 BY KWA Total Acres: 0.00 Total Land Value: 75,000 Market: 0 Agricultural: 0 Common: 75,000 PRINTED 08/06/2024 BY SYS