LOT 33
FLORA PARKE #4 PB 7/137

LEMASTER THOMAS
32416 FERN PARKE WAY
FERNANDINA BEACH, FL 32034

2024

26-2N-28-0552-0033-0000

NASSAU COUNTY PROPERTY

BUILDING CHARACTERISTICS

ELEMENT	CD	CONSTRUCTION
Exterior Wall	16	WD FR STUC 100
Roof Structur	03	GABLE/HIP 100
Roof Cover	03	COMP SHNGL 100
Interior Wall	05	DRYWALL 100
Interior Floo	14	CARPET 70
Interior Floo	11	CLAY TILE 30
Air Condition	03	CENTRAL 100
Heating Type	04	AIR DUCTED 100
Bedrooms		4 100
Bathrooms		3 100
Frame	02	WOOD FRAME 100
Stories	1.5	1.5 100
Units		0 100
Occupancy	00	NONE 100
Quality	03	Quality Level 03
DOR CODE	0100	SINGLE FAMILY
MAP NUM		MKT AREA 04
NEIGHBORHOOD/LOC	4041.00	

AREA TYPE	TOTAL GROSS AREA	PCT OF BASE	TOT ADJ AREA	SUBAREA MARKET VALUE
BAS	1,981	100	1,981	250,456
FGR	451	55	248	31,355
FOP	63	30	19	2,402
FSP	168	40	67	8,471
FUS	388	100	388	49,055
TOTALS	3,051		2,703	341,738

MARKET ADJUSTMENTS

TYPE	MDL	EFF. AREA	TOT ADJ PTS	EFF. BASE RATE	REPL. COST NEW	AYB	EYB	ECON	FNCT		NORM	% COND
0900	01	2,703	109.3440	136.68	369,446	2008	2008	0	0	0	7.50	92.50

1 SNGL FAM – 100% - 2021 Heated Area: 2369 HX Base Yr 2021

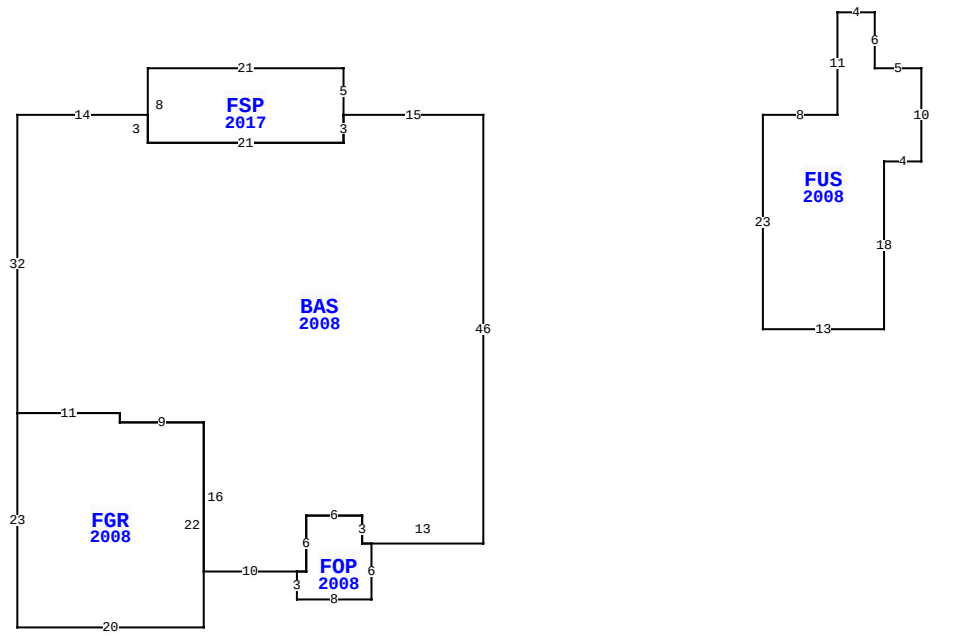

32416 FERN PARKE WAY, FERNANDINA BEACH

BLD DATE		LGL DATE	
XF DATE		LAND DATE	04/08/2024 MLU
INC DATE		AG DATE	

VALUATION SUMMARY

VALUATION BY		STANDARD
Tax Group: 4	Tax Dist:	
BUILDING MARKET VALUE		341,738
TOTAL MARKET OB/XF VALUE		40,648
TOTAL LAND VALUE - MARKET		75,000
TOTAL MARKET VALUE		457,386
SOH/AGL Deduction		139,981
ASSESSED VALUE		317,405
TOTAL EXEMPTION VALUE	HX HB	50,000
BASE TAXABLE VALUE		267,405
TOTAL JUST VALUE		457,386
NCON VALUE		0
INCOME VALUE		
PREVIOUS YEAR MKT VALUE		432,816

PERMIT NUM	DESCRIPTION	AMT	ISSUED
B203850	SWIM POOL	25,000	05/21/2020
P1216290	REMODEL	0	12/01/2012
C21534	CO ISSUED	0	04/29/2009
M14067	MECH OTHER	0	08/01/2008
E21031	ELEC OTHER	2,000	07/01/2008
P13371	OTHER	0	07/01/2008

SALES DATA

OFF RECORD Number	DATE	TYPE INST	Q U	V I	RSN CD	SALE PRICE
2337/0315	1/27/2020	WD	Q	I	01	294,500
GRANTOR: CARROLL ROBERT E						
GRANTEE: LEMASTER THOMAS						
1791/1354	4/26/2012	QC	U	I	11	100
GRANTOR: CARROLL ROBERT E						
GRANTEE: REECE JANET MARLENE						

BUILDING NOTES

BUILDING DIMENSIONS

BAS=[YR=2008] W15 FSP=[YR=2017] N5 W21 S8 E21 N3 $ S3 W21 N3 W14 S32 FGR=[YR=2008] S23 E20 N22 W9 N1 W11 $ E11 S1 E9 S16 E10 FOP=[YR=2008] S3 E8 N6 W1 N3 W6 S6 W1 $ E1 N6 E6 S3 E13 N46 $ PTR= E30 FUS=[YR=2008] E8 N11 E4 S6 E5 S10 W4 S18 W13 N23 $ W30 $.

EXTRA FEATURES

LN	OB/XF CODE	DESCRIPTION	BLD	CAP	L	W	UNITS	UT	Adj R	ADJ UNIT PRICE	ORIG COND	YEAR ON	YEAR ACTUAL	Q	% COND	OB/XF MKT VALUE	NOTES
1	0811	CONCRETE B	0	100	0	0	664.00	SF	5.20	5.20	100	2008	2008	3	89	3,073	
2	0861	POOL GUNIT	0	100	27	13	351.00	SF	85.00	85.00	100	2020	2020	3	93	27,747	
3	0855	CONC PAVER	0	100	0	0	405.00	SF	10.00	10.00	100	2020	2020	3	99	4,010	
4	0476	VF 6 SBPL	0	100	0	0	180.00	LF	32.00	32.00	100	2020	2020	3	96	5,530	
5	0470	VNYL GATE	0	100	0	0	1.00	UT	300.00	300.00	100	2020	2020	3	96	288	

LAND DESCRIPTION

TOTAL OB/XF 40,648

LN	USE CODE	CLS	LAND USE DESCRIPTION	CAP	RD	LOC ZONE	FRONT	DEPTH	TOT LND UTS	UNIT TYPE	DT	DPTH FACT	% COND	TOT ADJ	UNIT PRICE	ADJ UNIT PRICE	LAND VALUE	OTHER ADJUSTMENTS AND NOTES	YEAR	DENSITY	DECL	FRZ	YR	CONSRV
1	000100	C	SFR	100		PUD	0.00	0.00	1.00	LT		1.00	1.00	1.00	75,000.00	75,000.00	75,000							

REVIEW DATE 02/11/2021 BY KW Total Acres: 0.00 Total Land Value: 75,000 Market: 0 Agricultural: 0 Common: 75,000 PRINTED 08/06/2024 BY SYS