LOT 306
AMELIA NATIONAL #1B PB 7/191

ROBISON DAVID M/OZBEY LALE B
95264 WILD CHERRY DR
FERNANDINA BEACH, FL 32034

**2024**

**26-2N-28-006A-0306-0000**

## NASSAU COUNTY PROPERTY



## BUILDING CHARACTERISTICS

| ELEMENT | CD | CONSTRUCTION |
|---|---|---|
| Exterior Wall | 16 | WD FR STUC 100 |
| Roof Structur | 08 | IRREGULAR 100 |
| Roof Cover | 03 | COMP SHNGL 100 |
| Interior Wall | 05 | DRYWALL 100 |
| Interior Floo | 12 | HARDWOOD 50 |
| Interior Floo | 14 | CARPET 50 |
| Air Condition | 03 | CENTRAL 100 |
| Heating Type | 04 | AIR DUCTED 100 |
| Bedrooms | | 3 100 |
| Bathrooms | | 3 100 |
| Frame | 02 | WOOD FRAME 100 |
| Stories | 1. | 1. 100 |
| Units | | 0 100 |
| Occupancy | 00 | NONE 100 |
| Quality | 03 | Quality Level 03 |
| DOR CODE | 0100 | SINGLE FAMILY |
| MAP NUM | | MKT AREA 04 |
| NEIGHBORHOOD/LOC | 4042.00 | |

| AREA TYPE | TOTAL GROSS AREA | PCT OF BASE | TOT ADJ AREA | SUBAREA MARKET VALUE |
|---|---|---|---|---|
| BAS | 3,035 | 100 | 3,035 | 559,894 |
| FGR | 830 | 55 | 456 | 84,123 |
| FOP | 44 | 30 | 13 | 2,398 |
| FSP | 1,182 | 40 | 473 | 87,258 |
| FST | 10 | 55 | 6 | 1,107 |
| TOTALS | 5,101 | | 3,983 | 734,780 |

## MARKET ADJUSTMENTS

| TYPE | MDL | EFF. AREA | TOT ADJ PTS | EFF. BASE RATE | REPL. COST NEW | AYB | EYB | ECON | FNCT | | NORM | % COND |
|---|---|---|---|---|---|---|---|---|---|---|---|---|
| 0500 | 11 | 3,983 | 127.4445 | 191.17 | 761,430 | 2016 | 2016 | 0 | 0 | 0 | 3.50 | 96.50 |

1 SFR CUST – 100% - 2024 Heated Area: 3035 HX Base Yr 2024

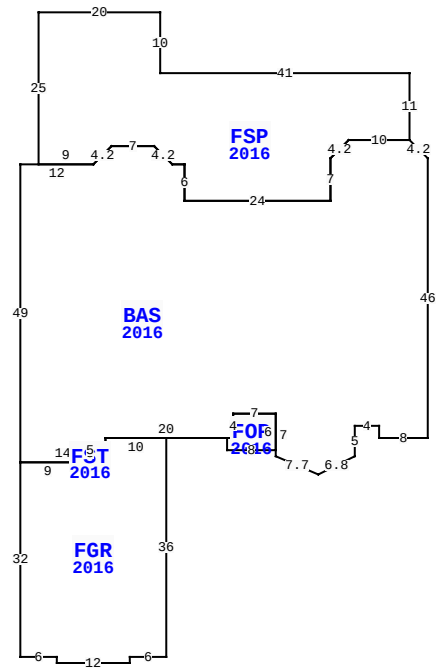


95264 WILD CHERRY DR, FERNANDINA BEACH

| | | | |
|---|---|---|---|
| BLD DATE | | LGL DATE | |
| XF DATE | | LAND DATE | 04/18/2024 MLU |
| INC DATE | | AG DATE | |

## VALUATION SUMMARY

| | | |
|---|---|---|
| VALUATION BY | | STANDARD |
| Tax Group: 4 | Tax Dist: | |
| BUILDING MARKET VALUE | | 734,780 |
| TOTAL MARKET OB/XF VALUE | | 20,988 |
| TOTAL LAND VALUE - MARKET | | 165,000 |
| TOTAL MARKET VALUE | | 920,768 |
| SOH/AGL Deduction | | 0 |
| ASSESSED VALUE | | 920,768 |
| TOTAL EXEMPTION VALUE | HX HB | 50,000 |
| BASE TAXABLE VALUE | | 870,768 |
| TOTAL JUST VALUE | | 920,768 |
| NCON VALUE | | 0 |
| INCOME VALUE | | |
| PREVIOUS YEAR MKT VALUE | | 771,560 |

| PERMIT NUM | DESCRIPTION | AMT | ISSUED |
|---|---|---|---|
| B1631651 | CO ISSUED | 0 | 06/15/2016 |
| B1631651 | NEW CONSTR | 407,325 | 01/01/2016 |

## SALES DATA

| OFF RECORD Number | DATE | TYPE INST | Q U | V I | RSN CD | SALE PRICE |
|---|---|---|---|---|---|---|
| 2280/0298 | 6/06/2019 | WD | Q | I | 01 | 570,000 |
| GRANTOR: OWENS DANIEL E & BARB | | | | | | |
| GRANTEE: ROBISON DAVID M & L | | | | | | |
| 2055/1408 | 6/23/2016 | WD | Q | I | 01 | 494,800 |
| GRANTOR: AMELIA NATIONAL CONST | | | | | | |
| GRANTEE: OWENS DANIEL E & BA | | | | | | |

## BUILDING NOTES

## BUILDING DIMENSIONS

BAS=[YR=2016] U3 L3 FSP=[YR=2016] N11 W41 N10 W20 S25 E9 U3 R3 E7 D3 R3 E2 S6 E24 N7 U3 R3 E10$ W10 D3 L3 S7 W24 N6 W2 U3 L3 W7 D3 L3 W12 S49 FGR=[YR=2016] S32 E6 S1 E12 N1 E6 N36 W10 S2 FST=[YR=2016] S2 W5 N2 E5$ W5 S2 W9$ E14 N4 E20 FOP=[YR=2016] S2 E8 N6 W7 S4 W1$ E1 N4 E7 S7 D3 R7 R6 U3 N5 E4 S2 E8 N46$.

## EXTRA FEATURES

| LN | OB/XF CODE | DESCRIPTION | BLD | CAP | L | W | UNITS | UT | Adj R | ADJ UNIT PRICE | ORIG COND | YEAR ON | YEAR ACTUAL | Q | % COND | OB/XF MKT VALUE | NOTES |
|---|---|---|---|---|---|---|---|---|---|---|---|---|---|---|---|---|---|
| 1 | 0500 | FP-PRE FAB | 0 | 100 | 0 | 0 | 2.00 | UT | 3,500.00 | 3,500.00 | 100 | 2016 | 2016 | 3 | 97 | 6,790 | |
| 2 | 0855 | CONC PAVER | 0 | 100 | 0 | 0 | 1,479.00 | SF | 10.00 | 10.00 | 100 | 2016 | 2016 | 3 | 96 | 14,198 | |

## LAND DESCRIPTION

TOTAL OB/XF 20,988

| LN | USE CODE | CLS | LAND USE DESCRIPTION | CAP | RD | LOC ZONE | FRONT | DEPTH | TOT LND UTS | UNIT TYPE | DT | DPTH FACT | % COND | TOT ADJ | UNIT PRICE | ADJ UNIT PRICE | LAND VALUE | OTHER ADJUSTMENTS AND NOTES | YEAR | DENSITY | DECL | FRZ | YR | CONSRV |
|---|---|---|---|---|---|---|---|---|---|---|---|---|---|---|---|---|---|---|---|---|---|---|---|---|
| 1 | 000134 | C | SFR POND | 100 | | PUD | 0.00 | 0.00 | 1.00 | LT | | 1.00 | 1.00 | 1.00 | 165,000.00 | 165,000.00 | 165,000 | | | | | | | |

REVIEW DATE 11/30/2022 BY DJA Total Acres: 0.00 Total Land Value: 165,000 Market: 0 Agricultural: 0 Common: 165,000 PRINTED 08/06/2024 BY SYS