PT OR 1725/1636

WALKER LIVING TRUST/WALKER RUDY E TRUSTEE
45741 BISMARK ROAD
CALLAHAN, FL 32011

2024

26-2N-25-0000-0001-0120

NASSAU COUNTY PROPERTY

BUILDING CHARACTERISTICS

ELEMENT	CD	CONSTRUCTION
Exterior Wall	20	FACE BRICK 100
Roof Structur	03	GABLE/HIP 100
Roof Cover	03	COMP SHNGL 100
Interior Wall	05	DRYWALL 100
Interior Floo	14	CARPET 90
Interior Floo	08	SHT VINYL 10
Air Condition	03	CENTRAL 100
Heating Type	04	AIR DUCTED 100
Bedrooms		3 100
Bathrooms		2 100
Frame	02	WOOD FRAME 100
Stories	1.	1. 100
Units		0 100
Occupancy	00	NONE 100
Quality	05	Quality Level 05
DOR CODE	5000	IMPROVED AG
MAP NUM		MKT AREA 08
NEIGHBORHOOD/LOC	8026.00	

AREA TYPE	TOTAL GROSS AREA	PCT OF BASE	TOT ADJ AREA	SUBAREA MARKET VALUE
BAS	1,521	100	1,521	144,679
FCP	750	25	188	17,883
FOP	270	30	81	7,705
TOTALS	2,541		1,790	170,266

MARKET ADJUSTMENTS

TYPE	MDL	EFF. AREA	TOT ADJ PTS	EFF. BASE RATE	REPL. COST NEW	AYB	EYB	ECON	FNCT		NORM	% COND
0100	01	1,790	121.0000	114.95	205,760	2000	2000	0	0	0	17.25	82.75

1 SINGLE FAM – 100% - 2001 Heated Area: 1521 HX Base Yr 2001

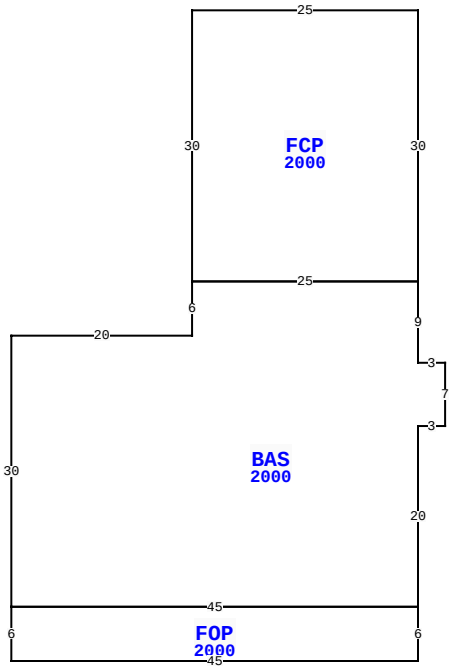

45741 BISMARK RD, CALLAHAN

BLD DATE		LGL DATE	
XF DATE		LAND DATE	05/19/2023 MLU
INC DATE		AG DATE	

VALUATION SUMMARY

VALUATION BY		STANDARD
Tax Group: 6	Tax Dist:	
BUILDING MARKET VALUE		170,266
TOTAL MARKET OB/XF VALUE		18,183
TOTAL LAND VALUE - MARKET		179,000
TOTAL MARKET VALUE		226,779
SOH/AGL Deduction		101,173
ASSESSED VALUE		125,606
TOTAL EXEMPTION VALUE	HX HB	50,000
BASE TAXABLE VALUE		75,606
TOTAL JUST VALUE		367,449
NCON VALUE		0
INCOME VALUE		
PREVIOUS YEAR MKT VALUE		361,415

PERMIT NUM	DESCRIPTION	AMT	ISSUED
B007191	NEW CONSTR	95,927	06/01/2000

SALES DATA

OFF RECORD Number	DATE	TYPE INST	Q U	V I	RSN CD	SALE PRICE
1725/1636	12/21/2010	WD	U	I	30	100
GRANTOR: WALKER RUDY E & JOANN						
GRANTEE: WALKER RUDY E & JO						
0744/0932	11/17/1995	WD	Q	V		40,000
GRANTOR: BRANDIES MARK DEAN						
GRANTEE: WALKER RUDY E & JOA						

EXTRA FEATURES

LN	OB/XF CODE	DESCRIPTION	BLD	CAP	L	W	UNITS	UT	Adj R	ADJ UNIT PRICE	ORIG COND	YEAR ON	YEAR ACTUAL	Q	% COND	OB/XF MKT VALUE	NOTES
1	0500	FP-PRE FAB	0	100	0	0	1.00	UT	3,500.00	3,500.00	100	2000	2000	3	84	2,940	
2	0811	CONCRETE B	0	100	0	0	872.00	SF	5.20	5.20	100	2000	2000	3	79	3,582	
3	0940	SHEDS/PORT	0	100	16	8	128.00	SF	30.00	30.00	100	1990	1990	3	20	768	
4	0351	CARPORT MT	0	100	0	0	600.00	SF	10.00	10.00	100	2003	2003	3	21	1,260	
5	0510	GARAGE WD-	0	100	0	0	600.00	SF	35.00	35.00	100	2003	2003	3	32	6,720	
6	0810	CONCRETE A	0	100	0	0	540.00	SF	6.50	6.50	100	2003	2003	3	83	2,913	

BUILDING NOTES

BUILDING DIMENSIONS

FCP=[YR=2000] W25 S30 BAS=[YR=2000] S6 W20 S30
FOP=[YR=2000] S6 E45 N6 W45 $ E45 N20 E3 N7 W3 N9 W25 $ E25 N30 $.

LAND DESCRIPTION

TOTAL OB/XF 18,183

LN	USE CODE	CLS	LAND USE DESCRIPTION	CAP	RD	LOC ZONE	FRONT	DEPTH	TOT LND UTS	UNIT TYPE	DT	DPTH FACT	% COND	TOT ADJ	UNIT PRICE	ADJ UNIT PRICE	LAND VALUE	OTHER ADJUSTMENTS AND NOTES	YEAR	DENSITY	DECL	FRZ	YR	CONSRV
1	005000	C	RURAL HOME	100	0005	OR	0.00	0.00	1.00	AC		1.00	1.00	1.00	35,000.00	35,000.00	35,000							
2	006000	A	PAST1/HAY	0		OR	0.00	0.00	9.00	AC		1.00	1.00	1.00	370.00	370.00	3,330							
3	009910	M	MKT.VAL.AG	0		OR	0.00	0.00	9.00	AC		1.00	1.00	1.00	16,000.00	16,000.00	144,000							

REVIEW DATE 05/18/2020 BY KBA Total Acres: 10.00 Total Land Value: 38,330 Market: 144,000 Agricultural: 3,330 Common: 35,000 PRINTED 08/06/2024 BY SYS