PT N1/2 OF SE1/4 OF
SEC 26-2N-24E IN OR 2493/1472

HAGAN DONALD G & ANN B L/E/
35121 KAREN RD
CALLAHAN, FL 32011

2024

26-2N-24-0000-0004-0110

BUILDING CHARACTERISTICS

ELEMENT	CD	CONSTRUCTION
Exterior Wall	20	FACE BRICK 100
Roof Structur	08	IRREGULAR 100
Roof Cover	03	COMP SHNGL 100
Interior Wall	05	DRYWALL 90
Interior Wall	06	CUST PANEL 10
Interior Floo	14	CARPET 90
Interior Floo	11	CLAY TILE 10
Air Condition	03	CENTRAL 100
Heating Type	04	AIR DUCTED 100
Bedrooms		4 100
Bathrooms		3.5 100
Frame	02	WOOD FRAME 100
Stories	2.	2. 100
Units		0 100
Occupancy	00	NONE 100
Quality	01	Quality Level 01

DOR CODE	0100	SINGLE FAMILY	
MAP NUM		MKT AREA	08
NEIGHBORHOOD/LOC	8001.00		

AREA TYPE	TOTAL GROSS AREA	PCT OF BASE	TOT ADJ AREA	SUBAREA MARKET VALUE
BAS	3,852	100	3,852	443,130
FEP	450	80	360	41,414
FGR	1,035	55	569	65,457
FOP	63	30	19	2,185
FOP	276	30	83	9,549
FOP	288	30	86	9,894
FST	99	55	54	6,212
FST	150	55	82	9,434
FUS	1,438	100	1,438	165,426
TOTALS	7,651		6,543	752,701

MARKET ADJUSTMENTS

TYPE	MDL	EFF. AREA	TOT ADJ PTS	EFF. BASE RATE	REPL. COST NEW	AYB	EYB	ECON	FNCT		NORM	% COND
0500	01	6,543	92.6820	139.02	909,608	2000	2000	0	0	0	17.25	82.75

1 SFR CUST – 100% - 2001 Heated Area: 5290 HX Base Yr 2001

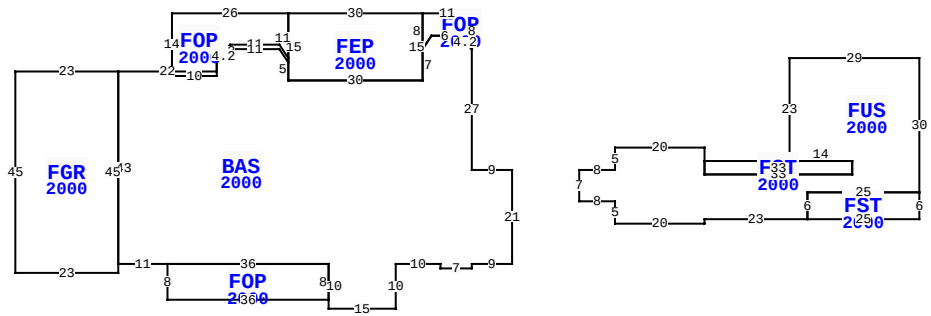

35121 KAREN RD, CALLAHAN

BLD DATE		LGL DATE	
XF DATE		LAND DATE	05/18/2023 MLU
INC DATE		AG DATE	

NASSAU COUNTY PROPERTY

PAGE 1 of 2 6

VALUATION SUMMARY

VALUATION BY		STANDARD
Tax Group: 6	Tax Dist:	
BUILDING MARKET VALUE		941,363
TOTAL MARKET OB/XF VALUE		40,537
TOTAL LAND VALUE - MARKET		79,920
TOTAL MARKET VALUE		1,061,820
SOH/AGL Deduction		573,264
ASSESSED VALUE		488,556
TOTAL EXEMPTION VALUE	HX HB	50,000
BASE TAXABLE VALUE		438,556
TOTAL JUST VALUE		1,061,820
NCON VALUE		0
INCOME VALUE		
PREVIOUS YEAR MKT VALUE		967,129

PERMIT NUM	DESCRIPTION	AMT	ISSUED
B006802	GARAGE	35,000	02/01/2000
B996590	NEW CONSTR	280,000	11/01/1999

SALES DATA

OFF RECORD Number	DATE	TYPE INST	Q / U	V / I	RSN CD	SALE PRICE
2493/1472	8/31/2021	WD	U	I	11	100
GRANTOR: HAGAN DONALD G & ANN						
GRANTEE: HAGAN DONALD W & PE						
0757/1963	4/25/1996	WD	Q	I		112,500
GRANTOR: SEARFOSS BARBARA EWIN						
GRANTEE: HAGAN DONALD & ANN						

BUILDING NOTES

BUILDING DIMENSIONS

BAS=[YR=2000] W9 N27 FOP=[YR=2000] N8 W11 FEP=[YR=2000] W30 FOP=[YR=2000] W26 S14 E10 N3 R3 U3 E11 D3 R2 N11$ S15 E30 N15$ S8 R2 U3 E6 D3 R3 $ L3 U3 W6 D3 L2 S7 W30 N5 L2 U3 W11 D3 L3 S3 W22 FGR=[YR=2000] W23 S45 E23 N45 $ S43E11 FOP=[YR=2000] S8 E36 N8 W36 $ E36 S10 E15 N10 E10 S1 E7 N1 E9 N21 $ PTR= E15 FUS=[YR=2000] E8 N5 E20 S3 FST=[YR=2000] S3 E33 N3 W33 $ S3 E33 N3 W14 N23 E29 S30 FST=[YR=2000] W25 S6 E25 N6 $ W25 S6 W23 S1 W20 N5 W8 N7 $ W15 $.

EXTRA FEATURES

LN	OB/XF CODE	DESCRIPTION	BLD	CAP	L	W	UNITS	UT	Adj R	ADJ UNIT PRICE	ORIG COND	YEAR ON	YEAR ACTUAL	Q	% COND	OB/XF MKT VALUE	NOTES
1	1127	BRICK 8"	0	100	27	4	108.00	SF	11.00	11.00	100	2000	2000	3	94	1,117	
2	0812	CONCRETE C	0	100	0	0	10,467.00	SF	4.00	4.00	100	2000	2000	3	79	33,076	
3	0510	GARAGE WD-	0	100	25	25	625.00	SF	35.00	35.00	100	2001	2001	3	29	6,344	

LAND DESCRIPTION

TOTAL OB/XF 40,537

LN	USE CODE	CLS	LAND USE DESCRIPTION	CAP	RD	LOC ZONE	FRONT	DEPTH	TOT LND UTS	UNIT TYPE	DT	DPTH FACT	% COND	TOT ADJ	UNIT PRICE	ADJ UNIT PRICE	LAND VALUE	OTHER ADJUSTMENTS AND NOTES	YEAR	DENSITY	DECL	FRZ	YR	CONSRV
1	000115	C	SFR ACRES	100	0005	OR	0.00	0.00	4.44	AC		1.00	1.00	1.00	18,000.00	18,000.00	79,920							

REVIEW DATE 08/05/2021 BY TWA Total Acres: 4.44 Total Land Value: 79,920 Market: 0 Agricultural: 0 Common: 79,920 PRINTED 08/06/2024 BY SYS

PT N1/2 OF SE1/4 OF
SEC 26-2N-24E IN OR 2493/1472

HAGAN DONALD G & ANN B L/E/
35121 KAREN RD
CALLAHAN, FL 32011

2024

26-2N-24-0000-0004-0110

BUILDING CHARACTERISTICS

ELEMENT	CD	CONSTRUCTION
Exterior Wall	05	AVERAGE 90
Exterior Wall	20	FACE BRICK 10
Roof Structur	07	GAMBREL 100
Roof Cover	03	COMP SHNGL 100
Interior Wall	05	DRYWALL 100
Interior Floo	03	CONC FINSH 100
Air Condition	03	CENTRAL 100
Heating Type	04	AIR DUCTED 100
Bedrooms		1 100
Bathrooms		1 100
Frame	02	WOOD FRAME 100
Stories	1.	1. 100
Units		0 100
Occupancy	00	NONE 100
Quality	01	Quality Level 01
DOR CODE	0100	SINGLE FAMILY
MAP NUM		MKT AREA 08
NEIGHBORHOOD/LOC	8001.00	

AREA TYPE	TOTAL GROSS AREA	PCT OF BASE	TOT ADJ AREA	SUBAREA MARKET VALUE
BAS	407	100	407	53,547
FGR	243	55	134	17,630
FGR	1,550	55	852	112,092
FOP	136	30	41	5,394
TOTALS	2,336		1,434	188,662

MARKET ADJUSTMENTS

TYPE	MDL	EFF. AREA	TOT ADJ PTS	EFF. BASE RATE	REPL. COST NEW	AYB	EYB	ECON	FNCT		NORM	% COND
0500	01	1,434	99.4968	149.25	214,024	2000	2000	0	0	0	11.85	88.15

2 SFR CUST – 100% - 2001 Heated Area: 407 HX Base Yr 2001

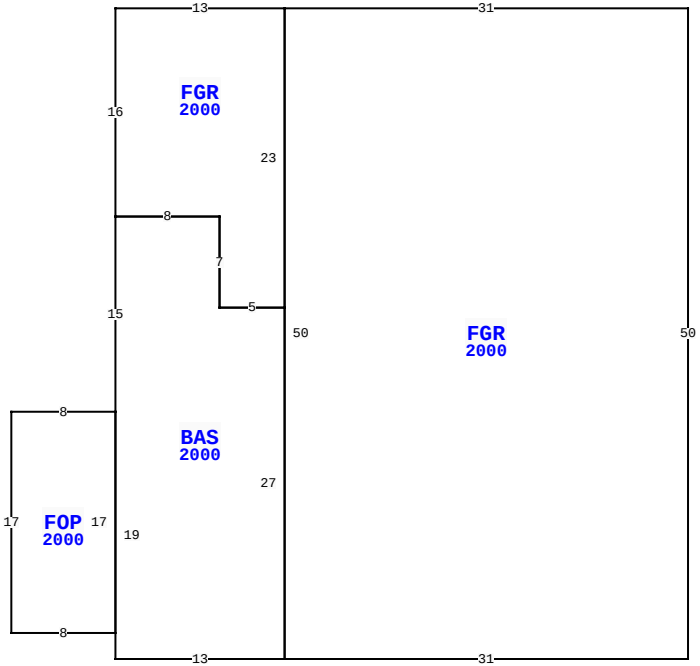

35121 KAREN RD, CALLAHAN

BLD DATE		LGL DATE	
XF DATE		LAND DATE	05/18/2023 MLU
INC DATE		AG DATE	

NASSAU COUNTY PROPERTY

VALUATION SUMMARY

VALUATION BY		STANDARD
Tax Group: 6	Tax Dist:	
BUILDING MARKET VALUE		941,363
TOTAL MARKET OB/XF VALUE		40,537
TOTAL LAND VALUE - MARKET		79,920
TOTAL MARKET VALUE		1,061,820
SOH/AGL Deduction		573,264
ASSESSED VALUE		488,556
TOTAL EXEMPTION VALUE	HX HB	50,000
BASE TAXABLE VALUE		438,556
TOTAL JUST VALUE		1,061,820
NCON VALUE		0
INCOME VALUE		
PREVIOUS YEAR MKT VALUE		967,129

PERMIT NUM	DESCRIPTION	AMT	ISSUED

SALES DATA

OFF RECORD Number	DATE	TYPE INST	Q / U	V / I	RSN CD	SALE PRICE
2493/1472	8/31/2021	WD	U	I	11	100
GRANTOR: HAGAN DONALD G & ANN						
GRANTEE: HAGAN DONALD W & PE						
0757/1963	4/25/1996	WD	Q	I		112,500
GRANTOR: SEARFOSS BARBARA EWIN						
GRANTEE: HAGAN DONALD & ANN						

BUILDING NOTES

BUILDING DIMENSIONS

FGR=[YR=2000] W31 FGR=[YR=2000] W13 S16 BAS=[YR=2000] S15 FOP=[YR=2000] W8 S17 E8 N17 $ S19 E13 N27 W5 N7 W8 $ E8 S7 E5 N23 $ S50 E31 N50 $.

EXTRA FEATURES

L N	OB/XF CODE	DESCRIPTION	BLD	CAP	L	W	UNITS	UT	Adj R	ADJ UNIT PRICE	ORIG COND	YEAR ON	YEAR ACTUAL	Q	% COND	OB/XF MKT VALUE	NOTES

LAND DESCRIPTION

TOTAL OB/XF 0

L N	USE CODE	CLS	LAND USE DESCRIPTION	CAP	R D	LOC ZONE	FRONT	DEPTH	TOT LND UTS	UNIT TYPE	D T	DPTH FACT	% COND	TOT ADJ	UNIT PRICE	ADJ UNIT PRICE	LAND VALUE	OTHER ADJUSTMENTS AND NOTES	YEAR	DENSITY	DECL	FRZ	YR	CONSRV

REVIEW DATE 08/05/2021 BY TWA Total Acres: 4.44 Total Land Value: 79,920 Market: 0 Agricultural: 0 Common: 79,920 PRINTED 08/06/2024 BY SYS