S1/2 OF SW1/4
IN OR 1819/140
EX 5-8 5-9 5-11 5-13 & 5-14

GREEN ROBERT B & ROBIN L
4142 CHARLES GREEN RD
HILLIARD, FL 32046-1326

2024

26-2N-23-0000-0005-0070

NASSAU COUNTY PROPERTY

BUILDING CHARACTERISTICS

ELEMENT	CD	CONSTRUCTION
Exterior Wall	05	AVERAGE 90
Exterior Wall	20	FACE BRICK 10
Roof Structur	08	IRREGULAR 100
Roof Cover	03	COMP SHNGL 100
Interior Wall	05	DRYWALL 100
Interior Floo	12	HARDWOOD 80
Interior Floo	11	CLAY TILE 20
Air Condition	03	CENTRAL 100
Heating Type	04	AIR DUCTED 100
Bedrooms		3 100
Bathrooms		2 100
Frame	02	WOOD FRAME 100
Stories	0	0 100
Units		0 100
Occupancy	00	NONE 100
Quality	02	Quality Level 02
DOR CODE	5600	TIMBERLAND 70-79
MAP NUM		MKT AREA 09
NEIGHBORHOOD/LOC	9001.00	

AREA TYPE	TOTAL GROSS AREA	PCT OF BASE	TOT ADJ AREA	SUBAREA MARKET VALUE
BAS	2,150	100	2,150	254,243
FGR	598	55	329	38,905
FOP	208	30	62	7,331
FOP	280	30	84	9,933
FUS	338	100	338	39,970
TOTALS	3,574		2,963	350,381

MARKET ADJUSTMENTS

TYPE	MDL	EFF. AREA	TOT ADJ PTS	EFF. BASE RATE	REPL. COST NEW	AYB	EYB	ECON	FNCT		NORM	% COND
0900	01	2,963	99.9267	124.91	370,108	2012	2012	0	0	0	5.33	94.67

2 SNGL FAM – 100% - 2013 Heated Area: 2488 HX Base Yr 2013

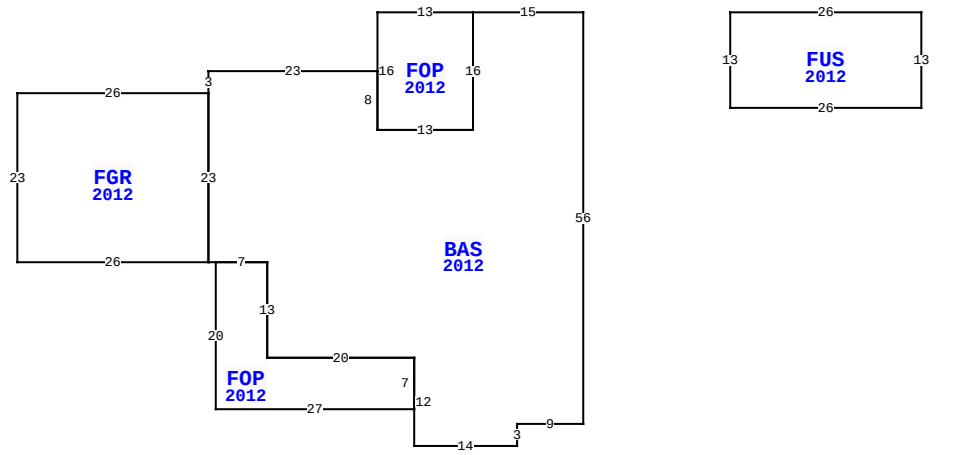

4142 CHARLES GREEN RD, HILLIARD

BLD DATE		LGL DATE	
XF DATE		LAND DATE	06/15/2023 MLU
INC DATE		AG DATE	

VALUATION SUMMARY

VALUATION BY		STANDARD
Tax Group: 6	Tax Dist:	
BUILDING MARKET VALUE		350,381
TOTAL MARKET OB/XF VALUE		3,472
TOTAL LAND VALUE - MARKET		235,200
TOTAL MARKET VALUE		388,351
SOH/AGL Deduction		211,810
ASSESSED VALUE		176,541
TOTAL EXEMPTION VALUE	HX HB	50,000
BASE TAXABLE VALUE		126,541
TOTAL JUST VALUE		589,053
NCON VALUE		0
INCOME VALUE		
PREVIOUS YEAR MKT VALUE		573,424

PERMIT NUM	DESCRIPTION	AMT	ISSUED
230010128	NEW SHINGLES	22,400	08/08/2023
B0719996	CO ISSUED	0	09/10/2012
M15382	H/AC	0	06/01/2010

SALES DATA

OFF RECORD Number	DATE	TYPE INST	Q U	V I	RSN CD	SALE PRICE
1819/0140	1/14/2012	QC	U	V	11	100
GRANTOR: GREEN ROBERT B						
GRANTEE: GREEN ROBERT B & RO						
0884/0617	5/24/1999	QC	U	I	01	100
GRANTOR: GREEN ROBERT B & VICK						
GRANTEE: GREEN ROBERT B						

BUILDING NOTES

BUILDING DIMENSIONS

BAS=[YR=2012] W15 FOP=[YR=2012] W13 S16 E13 N16$ S16 W13 N8 W23 S3 FGR=[YR=2012] W26 S23 E26 N23$ S23 E1FOP=[YR=2012] S20 E27 N7 W20 N13 W7$ E7 S13 E20 S12 E14 N3 E9 N56$ PTR= E20 FUS=[YR=2012] E26 S13 W26 N13$ W20$.

EXTRA FEATURES

LN	OB/XF CODE	DESCRIPTION	BLD	CAP	L	W	UNITS	UT	Adj R	ADJ UNIT PRICE	ORIG COND	YEAR ON	YEAR ACTUAL	Q	% COND	OB/XF MKT VALUE	NOTES
1	0811	CONCRETE B	0	100	0	0	718.00	SF	5.20	5.20	100	2012	2012	3	93	3,472	

LAND DESCRIPTION

TOTAL OB/XF 3,472

LN	USE CODE	CLS	LAND USE DESCRIPTION	CAP	RD	LOC ZONE	FRONT	DEPTH	TOT LND UTS	UNIT TYPE	DT	DPTH FACT	% COND	TOT ADJ	UNIT PRICE	ADJ UNIT PRICE	LAND VALUE	OTHER ADJUSTMENTS AND NOTES	YEAR	DENSITY	DECL	FRZ	YR	CONSRV
1	005000	C	RURAL HOME	100	0007	OR	0.00	0.00	1.00	AC		1.00	1.00	1.00	30,000.00	30,000.00	30,000							
2	005600	A	TIMBER 3 SI	0		OR	0.00	0.00	5.37	AC		1.00	1.00	1.00	415.00	415.00	2,229							
3	005010	A	SVCE ACRGE	0		OR	0.00	0.00	2.00	AC		1.00	1.00	1.00	500.00	500.00	1,000							
4	006005	A	PAST/GRAZE	0		OR	0.00	0.00	3.43	AC		1.00	1.00	1.00	370.00	370.00	1,269							
5	009910	M	MKT.VAL.AG	0		OR	0.00	0.00	10.80	AC		1.00	1.00	1.00	19,000.00	19,000.00	205,200							

REVIEW DATE 05/17/2024 BY WWA Total Acres: 11.80 Total Land Value: 34,498 Market: 205,200 Agricultural: 4,498 Common: 30,000 PRINTED 08/06/2024 BY SYS