LOT 76
IN OR 1273/1501
FLORA PARKE #3 PB 6/402

RICHARDSON WILLIAM R & KAREN D
33347 SUNNY PARKE CIRCLE
FERNANDINA BEACH, FL 32034

2024

25-2N-28-0551-0076-0000

BUILDING CHARACTERISTICS

ELEMENT	CD	CONSTRUCTION
Exterior Wall	20	FACE BRICK 100
Roof Structur	03	GABLE/HIP 100
Roof Cover	03	COMP SHNGL 100
Interior Wall	05	DRYWALL 100
Interior Floo	14	CARPET 60
Interior Floo	11	CLAY TILE 40
Air Condition	03	CENTRAL 100
Heating Type	04	AIR DUCTED 100
Bedrooms		4 100
Bathrooms		3 100
Frame	02	WOOD FRAME 100
Stories	1.	1. 100
Units		0 100
Occupancy	00	NONE 100
Quality	03	Quality Level 03
DOR CODE	0100	SINGLE FAMILY
MAP NUM		MKT AREA 04
NEIGHBORHOOD/LOC	4041.00	

AREA TYPE	TOTAL GROSS AREA	PCT OF BASE	TOT ADJ AREA	SUBAREA MARKET VALUE
BAS	2,602	100	2,602	293,026
FGR	640	55	352	39,641
FOP	58	30	17	1,915
FSP	294	40	118	13,289
PTO	210	5	10	1,126
TOTALS	3,804		3,099	348,996

MARKET ADJUSTMENTS

TYPE	MDL	EFF. AREA	TOT ADJ PTS	EFF. BASE RATE	REPL. COST NEW	AYB	EYB	ECON	FNCT		NORM	% COND
0900	01	3,099	105.0640	131.33	406,992	2004	2004	0	0	0	14.25	85.75

1 SNGL FAM – 100% - 2005 Heated Area: 2602 HX Base Yr 2005

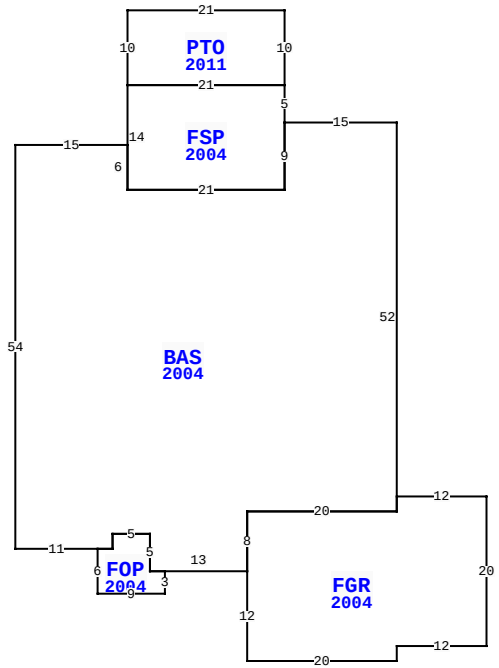

33347 SUNNY PARKE CIR, FERNANDINA BEACH

BLD DATE		LGL DATE	
XF DATE		LAND DATE	04/08/2024 MLU
INC DATE		AG DATE	

NASSAU COUNTY PROPERTY

PAGE 1 of 1 4

VALUATION SUMMARY

VALUATION BY		STANDARD
Tax Group: 4	Tax Dist:	
BUILDING MARKET VALUE		348,996
TOTAL MARKET OB/XF VALUE		7,077
TOTAL LAND VALUE - MARKET		75,000
TOTAL MARKET VALUE		431,073
SOH/AGL Deduction		205,519
ASSESSED VALUE		225,554
TOTAL EXEMPTION VALUE	HX HB	50,000
BASE TAXABLE VALUE		175,554
TOTAL JUST VALUE		431,073
NCON VALUE		0
INCOME VALUE		
PREVIOUS YEAR MKT VALUE		406,643

PERMIT NUM	DESCRIPTION	AMT	ISSUED

SALES DATA

OFF RECORD Number	DATE	TYPE INST	Q / U	V / I	RSN CD	SALE PRICE
1273/1501	11/15/2004	WD	Q	I		298,500
GRANTOR: SEDA CONSTRUCTION COM						
GRANTEE: RICHARDSON WM ROGER						
1230/1732	5/17/2004	WD	U	V	19	49,000
GRANTOR: FLORA PARKE DEVELOPME						
GRANTEE: SEDA CONSTRUCTION C						

BUILDING NOTES

BUILDING DIMENSIONS

BAS=[YR=2004] W15 FSP=[YR=2004] N5PTO=[YR=2011] N10 W21 S10 E21$ W21 S14E21 N9 $ S9 W21 N6 W15 S54 E11 FOP=[YR=2004] S6 E9 N3 W2 N5 W5 S2 W2$ E2 N2 E5 S5 E13 FGR=[YR=2004] S12 E20 N2 E12 N20 W12 S2 W20 S8$ N8 E20 N52$.

EXTRA FEATURES

LN	OB/XF CODE	DESCRIPTION	BLD	CAP	L	W	UNITS	UT	Adj R	ADJ UNIT PRICE	ORIG COND	YEAR ON	YEAR ACTUAL	Q	% COND	OB/XF MKT VALUE	NOTES
1	0500	FP-PRE FAB	0	100	0	0	1.00	UT	3,500.00	3,500.00	100	2004	2004	3	88	3,080	
2	0810	CONCRETE A	0	100	0	0	732.00	SF	6.50	6.50	100	2004	2004	3	84	3,997	

LAND DESCRIPTION

TOTAL OB/XF 7,077

LN	USE CODE	CLS	LAND USE DESCRIPTION	CAP	RD	LOC ZONE	FRONT	DEPTH	TOT LND UTS	UNIT TYPE	DT	DPTH FACT	% COND	TOT ADJ	UNIT PRICE	ADJ UNIT PRICE	LAND VALUE	OTHER ADJUSTMENTS AND NOTES	YEAR	DENSITY	DECL	FRZ	YR	CONSRV
1	000134	C	SFR POND	100		PUD	0.00	0.00	1.00	LT		1.00	1.00	1.00	75,000.00	75,000.00	75,000							

REVIEW DATE 01/06/2023 BY DJ Total Acres: 0.00 Total Land Value: 75,000 Market: 0 Agricultural: 0 Common: 75,000 PRINTED 08/06/2024 BY SYS