LOT 109
IN OR 1086/572
FLORA PARKE 2A PB 6/239

LEWIS JEFFERY M & ELIZABETH
30565 FOREST PARKE DRIVE
FERNANDINA BEACH, FL 32034

2024

25-2N-28-0550-0109-0000

BUILDING CHARACTERISTICS

ELEMENT	CD	CONSTRUCTION
Exterior Wall	16	WD FR STUC 100
Roof Structur	03	GABLE/HIP 100
Roof Cover	03	COMP SHNGL 100
Interior Wall	05	DRYWALL 100
Interior Floo	14	CARPET 80
Interior Floo	11	CLAY TILE 20
Air Condition	03	CENTRAL 100
Heating Type	04	AIR DUCTED 100
Bedrooms		3 100
Bathrooms		2 100
Frame	02	WOOD FRAME 100
Stories	1.	1. 100
Units		0 100
Occupancy	00	NONE 100
Quality	03	Quality Level 03
DOR CODE	0100	SINGLE FAMILY
MAP NUM		MKT AREA 04
NEIGHBORHOOD/LOC	4041.00	

AREA TYPE	TOTAL GROSS AREA	PCT OF BASE	TOT ADJ AREA	SUBAREA MARKET VALUE
BAS	2,351	100	2,351	274,212
FGR	420	55	231	26,943
FOP	45	30	14	1,632
FSP	161	40	64	7,464
TOTALS	2,977		2,660	310,253

MARKET ADJUSTMENTS

TYPE	MDL	EFF. AREA	TOT ADJ PTS	EFF. BASE RATE	REPL. COST NEW	AYB	EYB	ECON	FNCT		NORM	% COND
0900	01	2,660	104.2560	130.32	346,651	2002	2002	0	0	0	10.50	89.50

1 SNGL FAM – 100% - 2004 Heated Area: 2351 HX Base Yr 2004

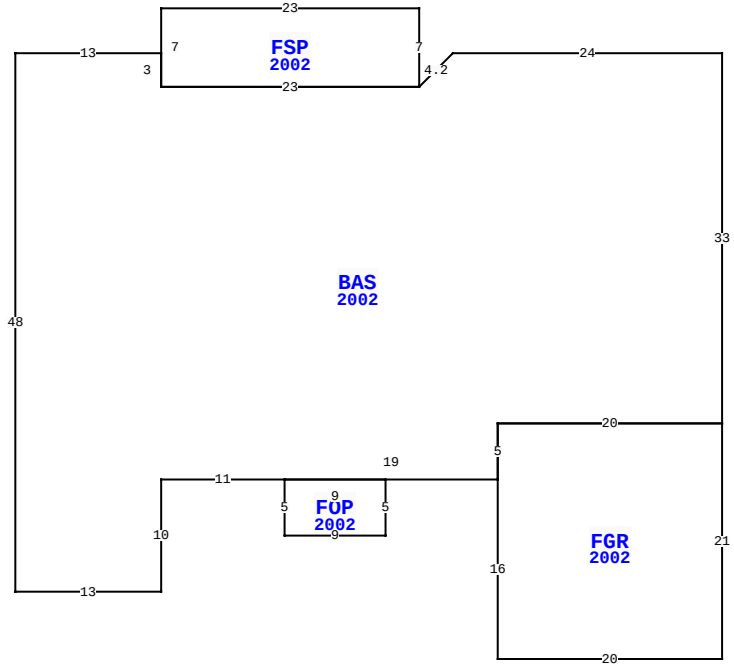

30565 FOREST PARKE DR, FERNANDINA BEACH

BLD DATE		LGL DATE	
XF DATE		LAND DATE	04/08/2024 MLU
INC DATE		AG DATE	

NASSAU COUNTY PROPERTY

PAGE 1 of 1 4

VALUATION SUMMARY

VALUATION BY		STANDARD
Tax Group: 4	Tax Dist:	
BUILDING MARKET VALUE		310,253
TOTAL MARKET OB/XF VALUE		2,776
TOTAL LAND VALUE - MARKET		75,000
TOTAL MARKET VALUE		388,029
SOH/AGL Deduction		186,873
ASSESSED VALUE		201,156
TOTAL EXEMPTION VALUE	HX HB	50,000
BASE TAXABLE VALUE		151,156
TOTAL JUST VALUE		388,029
NCON VALUE		0
INCOME VALUE		
PREVIOUS YEAR MKT VALUE		364,187

PERMIT NUM	DESCRIPTION	AMT	ISSUED

SALES DATA

OFF RECORD Number	DATE	TYPE INST	Q U	V I	RSN CD	SALE PRICE
1086/0572	10/09/2002	WD	Q	I		183,700
GRANTOR: SEDA CONSTRUCTION COM						
GRANTEE: LEWIS JEFFERY M & E						
1037/0370	2/13/2002	WD	U	V	19	27,500
GRANTOR: FLORA PARKE DEVELOPME						
GRANTEE: SEDA CONSTRUCTION C						

BUILDING NOTES

BUILDING DIMENSIONS

BAS=[YR=2002] W24 D3 L3 FSP=[YR=2002] N7 W23 S7 E23 $ W23 N3 W13 S48 E13 N10 E11 FOP=[YR=2002] S5 E9 N5 W9 $ E19 FGR=[YR=2002] S16 E20 N21 W20 S5 $ N5 E20 N33 $.

EXTRA FEATURES

LN	OB/XF CODE	DESCRIPTION	BLD	CAP	L	W	UNITS	UT	Adj R	ADJ UNIT PRICE	ORIG COND	YEAR ON	YEAR ACTUAL	Q	% COND	OB/XF MKT VALUE	NOTES
1	0811	CONCRETE B	0	100	0	0	651.00	SF	5.20	5.20	100	2002	2002	3	82	2,776	

LAND DESCRIPTION

TOTAL OB/XF 2,776

LN	USE CODE	CLS	LAND USE DESCRIPTION	CAP	RD	LOC ZONE	FRONT	DEPTH	TOT LND UTS	UNIT TYPE	DT	DPTH FACT	% COND	TOT ADJ	UNIT PRICE	ADJ UNIT PRICE	LAND VALUE	OTHER ADJUSTMENTS AND NOTES	YEAR	DENSITY	DECL	FRZ	YR	CONSRV
1	000134	C	SFR POND	100		PUD	0.00	0.00	1.00	LT		1.00	1.00	1.00	75,000.00	75,000.00	75,000							

REVIEW DATE 01/06/2023 BY DJA Total Acres: 0.00 Total Land Value: 75,000 Market: 0 Agricultural: 0 Common: 75,000 PRINTED 08/06/2024 BY SYS