LOT 7 (EX S-1 & S-2 & S-3)
IN OR 2209/1186
STE-MAG UNIT 2 PB 5/47

BROWN JOSEPH L JR & LARAE C
96053 BAKER DR
YULEE, FL 32097

2024

24-2N-28-4962-0007-0000

BUILDING CHARACTERISTICS

ELEMENT	CD	CONSTRUCTION
Exterior Wall	16	WD FR STUC 100
Roof Structur	08	IRREGULAR 100
Roof Cover	03	COMP SHNGL 100
Interior Wall	05	DRYWALL 100
Interior Floo	13	LVT/LAMNT 70
Interior Floo	11	CLAY TILE 30
Air Condition	03	CENTRAL 100
Heating Type	04	AIR DUCTED 100
Bedrooms		7 100
Bathrooms		5.5 100
Frame	02	WOOD FRAME 100
Stories	2.	2. 100
Units		0 100
Occupancy	00	NONE 100
Quality	04	Quality Level 04
DOR CODE	0100	SINGLE FAMILY
MAP NUM		MKT AREA 04
NEIGHBORHOOD/LOC	4031.00	

AREA TYPE	TOTAL GROSS AREA	PCT OF BASE	TOT ADJ AREA	SUBAREA MARKET VALUE
BAS	3,190	100	3,190	539,332
FGR	442	55	243	41,084
FGR	550	55	302	51,059
FOP	137	30	41	6,932
FOP	304	30	91	15,385
FSP	330	40	132	22,318
FST	15	55	8	1,352
FUS	2,025	100	2,025	342,366
STR	60	10	6	1,014
TOTALS	7,053		6,038	1,020,842

MARKET ADJUSTMENTS

TYPE	MDL	EFF. AREA	TOT ADJ PTS	EFF. BASE RATE	REPL. COST NEW	AYB	EYB	ECON	FNCT		NORM	% COND
0500	01	6,038	115.0118	172.52	1,041,676	2019	2019	0	0	0	2.00	98.00

1 SFR CUST – 100% - 2020 Heated Area: 5215 HX Base Yr 2020

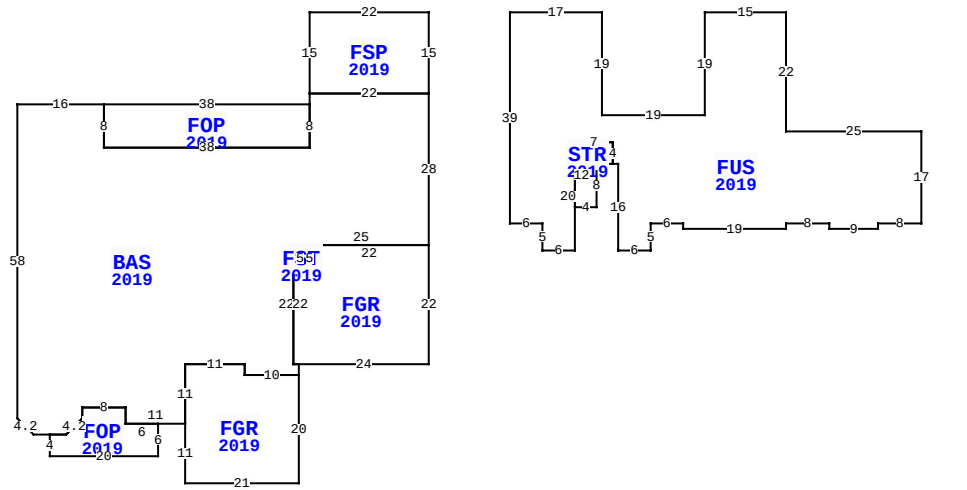

96053 BAKER DR, YULEE

BLD DATE		LGL DATE	
XF DATE		LAND DATE	04/22/2024 MLU
INC DATE		AG DATE	

NASSAU COUNTY PROPERTY

PAGE 1 of 1 4

VALUATION SUMMARY

VALUATION BY		STANDARD
Tax Group: 4	Tax Dist:	
BUILDING MARKET VALUE		1,020,842
TOTAL MARKET OB/XF VALUE		113,446
TOTAL LAND VALUE - MARKET		125,000
TOTAL MARKET VALUE		1,259,288
SOH/AGL Deduction		453,009
ASSESSED VALUE		806,279
TOTAL EXEMPTION VALUE	HX HB	50,000
BASE TAXABLE VALUE		756,279
TOTAL JUST VALUE		1,259,288
NCON VALUE		0
INCOME VALUE		
PREVIOUS YEAR MKT VALUE		1,171,418

PERMIT NUM	DESCRIPTION	AMT	ISSUED
C1909687	CO ISSUED	0	10/17/2019
B1905923	SCRN ENCLSRE	11,795	07/01/2019
19006330	SWIM POOL	100,000	06/14/2019
B1909687	NEW CONSTR	694,206	02/01/2019

SALES DATA

OFF RECORD Number	DATE	TYPE INST	Q / U	V / I	RSN CD	SALE PRICE
2209/1186	7/11/2018	QC	U	V	11	100
GRANTOR: COLEMAN LARRY & JACQU						
GRANTEE: BROWN JOSEPH L JR &						
0994/1334	6/28/2001	WD	U	V	01	16,000
GRANTOR: BAKER JOHN R & VERA L						
GRANTEE: COLEMAN LARRY & JAC						

BUILDING NOTES

BUILDING DIMENSIONS

FSP=[YR=2019] W22 S15 BAS=[YR=2019] S2 FOP=[YR=2019] W38 S8 E38 N8$ S8 W38 N8 W16 S58 D3 R3 E3 FOP=[YR=2019] S4 E20 N6 W6 N3 W8 S2 D3 L3 W3$ E3 U3 R3 N2 E8 S3 E11 FGR=[YR=2019] S11 E21 N20 W10 N2 W11 S11$ N11 E11 S2 E10 N2 FGR=[YR=2019] E24 N22 W22 FST=[YR=2019] S5 W3 N5 E3$ W3 S22 E1$ W1 N22 E25 N28 W22$ E22 N15$ PTR= E15 FUS=[YR=2019] E17 S19 E19 N19 E15 S22 E25 S17 W8 S1 W9 N1 W8 S1 W19 N1 W6 S5 W6 N16 W1 STR=[YR=2019] W3 S8 W4 N12 E7 S4$ N4 W7 S20 W6 N5 W6 N39$ W15$.

EXTRA FEATURES

LN	OB/XF CODE	DESCRIPTION	BLD	CAP	L	W	UNITS	UT	Adj R	ADJ UNIT PRICE	ORIG COND	YEAR ON	YEAR ACTUAL	Q	% COND	OB/XF MKT VALUE	NOTES
1	0855	CONC PAVER	0	100	48	4	192.00	SF	10.00	10.00	100	2019	2019	3	98	1,882	
2	0855	CONC PAVER	0	100	0	0	1,618.00	SF	10.00	10.00	100	2019	2019	3	98	15,856	
3	0500	FP-PRE FAB	0	100	0	0	1.00	UT	3,500.00	3,500.00	100	2019	2019	3	99	3,465	
4	0600	SUMMER KIT	0	100	0	0	1.00	UT	8,750.00	8,750.00	100	2019	2019	3	86	7,525	
5	0861	POOL GUNIT	0	100	32	18	576.00	SF	85.00	85.00	100	2019	2019	3	90	44,064	
6	0871	POOL HTR R	0	100	0	0	1.00	UT	2,000.00	2,000.00	100	2019	2019	3	86	1,720	
7	0911	SCRN RM A	0	100	54	26	1,404.00	SF	17.50	17.50	100	2019	2019	3	86	21,130	
8	0855	CONC PAVER	0	100	0	0	828.00	SF	10.00	10.00	100	2019	2019	3	98	8,114	
9	0476	VF 6 SBPL	0	100	0	0	300.00	LF	32.00	32.00	100	2019	2019	3	95	9,120	
10	0470	VNYL GATE	0	100	0	0	2.00	UT	300.00	300.00	100	2019	2019	3	95	570	

TOTAL OB/XF 113,446

LAND DESCRIPTION

LN	USE CODE	CLS	LAND USE DESCRIPTION	CAP	RD	LOC ZONE	FRONT	DEPTH	TOT LND UTS	UNIT TYPE	DT	DPTH FACT	% COND	TOT ADJ	UNIT PRICE	ADJ UNIT PRICE	LAND VALUE	OTHER ADJUSTMENTS AND NOTES	YEAR	DENSITY	DECL	FRZ	YR	CONSRV
1	000100	C	SFR	100		RSF-1	0.00	0.00	1.00	AC		1.00	1.00	1.00	125,000.00	125,000.00	125,000							

REVIEW DATE 10/04/2019 BY KW Total Acres: 1.00 Total Land Value: 125,000 Market: 0 Agricultural: 0 Common: 125,000 PRINTED 08/06/2024 BY SYS