LOT 48
ESMT PT OR 1569/134
MARSHES @ LANCEFORD PB 7/141

WEBSTER PAUL S & LISA K
96246 WINDSOR DR
YULEE, FL 32097

2024

24-2N-28-1310-0048-0000

NASSAU COUNTY PROPERTY

BUILDING CHARACTERISTICS

ELEMENT	CD	CONSTRUCTION
Exterior Wall	16	WD FR STUC 100
Roof Structur	08	IRREGULAR 100
Roof Cover	03	COMP SHNGL 100
Interior Wall	05	DRYWALL 100
Interior Floo	14	CARPET 60
Interior Floo	11	CLAY TILE 40
Air Condition	03	CENTRAL 100
Heating Type	04	AIR DUCTED 100
Bedrooms		4 100
Bathrooms		3 100
Frame	02	WOOD FRAME 100
Stories	1.5	1.5 100
Units		0 100
Occupancy	00	NONE 100
Quality	04	Quality Level 04
DOR CODE	0100	SINGLE FAMILY
MAP NUM		MKT AREA 04
NEIGHBORHOOD/LOC	4078.00	

AREA TYPE	TOTAL GROSS AREA	PCT OF BASE	TOT ADJ AREA	SUBAREA MARKET VALUE
BAS	2,086	100	2,086	294,178
FGR	497	55	273	38,500
FOP	48	30	14	1,974
FSP	224	40	90	12,692
FUS	238	100	238	33,563
TOTALS	3,093		2,701	380,908

MARKET ADJUSTMENTS

TYPE	MDL	EFF. AREA	TOT ADJ PTS	EFF. BASE RATE	REPL. COST NEW	AYB	EYB	ECON	FNCT		NORM	% COND
0900	01	2,701	118.1376	147.67	398,857	2014	2014	0	0	0	4.50	95.50

1 SNGL FAM – 100% - 2022 Heated Area: 2324 HX Base Yr 2022

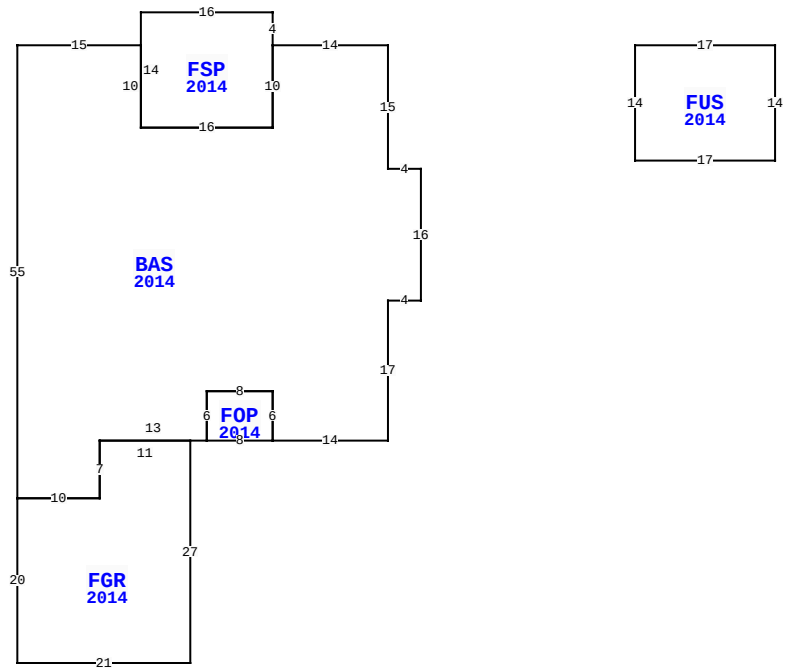

96246 WINDSOR DR, YULEE

BLD DATE		LGL DATE	
XF DATE		LAND DATE	04/23/2024 MLU
INC DATE		AG DATE	

VALUATION SUMMARY

VALUATION BY		STANDARD
Tax Group: 4	Tax Dist:	
BUILDING MARKET VALUE		380,908
TOTAL MARKET OB/XF VALUE		11,256
TOTAL LAND VALUE - MARKET		135,000
TOTAL MARKET VALUE		527,164
SOH/AGL Deduction		124,566
ASSESSED VALUE		402,598
TOTAL EXEMPTION VALUE	HX HB VX	55,000
BASE TAXABLE VALUE		347,598
TOTAL JUST VALUE		527,164
NCON VALUE		0
INCOME VALUE		
PREVIOUS YEAR MKT VALUE		480,146

PERMIT NUM	DESCRIPTION	AMT	ISSUED
B1428290	CO ISSUED	0	07/11/2014
B1428290	NEW CONSTR	293,626	02/01/2014

SALES DATA

OFF RECORD Number	DATE	TYPE INST	Q U	V I	RSN CD	SALE PRICE
2452/1192	4/09/2021	WD	Q	I	01	458,000
GRANTOR: ARNDT AARON P & KRIST						
GRANTEE: WEBSTER PAUL S & LI						
2301/0320	8/19/2019	WD	Q	I	01	398,000
GRANTOR: CORIGLIANO PETER J &						
GRANTEE: ARNDT AARON P & KRI						

BUILDING NOTES

BUILDING DIMENSIONS

BAS=[YR=2014] W14 FSP=[YR=2014] N4 W16 S14 E16 N10 $ S10 W16 N10 W15 S55 FGR=[YR=2014] S20 E21 N27 W11 S7 W10 $ E10 N7 E13 FOP=[YR=2014] E8 N6 W8 S6 $ N6 E8 S6 E14 N17 E4 N16 W4 N15 $ PTR= E30 FUS=[YR=2014] E17 S14 W17 N14 $ W30 $.

EXTRA FEATURES

LN	OB/XF CODE	DESCRIPTION	BLD	CAP	L	W	UNITS	UT	Adj R	ADJ UNIT PRICE	ORIG COND	YEAR ON	YEAR ACTUAL	Q	% COND	OB/XF MKT VALUE	NOTES
1	0855	CONC PAVER	0	100	0	0	858.00	SF	10.00	10.00	100	2014	2014	3	95	8,151	
2	0462	ST/AL FNC	0	100	0	0	414.00	SF	10.00	10.00	100	2014	2014	3	75	3,105	

LAND DESCRIPTION

TOTAL OB/XF 11,256

LN	USE CODE	CLS	LAND USE DESCRIPTION	CAP	RD	LOC ZONE	FRONT	DEPTH	TOT LND UTS	UNIT TYPE	DT	DPTH FACT	% COND	TOT ADJ	UNIT PRICE	ADJ UNIT PRICE	LAND VALUE	OTHER ADJUSTMENTS AND NOTES	YEAR	DENSITY	DECL	FRZ	YR	CONSRV
1	000116	C	SFR MARSH	100		PUD	0.00	0.00	1.00	LT		1.00	1.00	1.00	135,000.00	135,000.00	135,000							

REVIEW DATE 05/12/2019 BY KBA Total Acres: 0.00 Total Land Value: 135,000 Market: 0 Agricultural: 0 Common: 135,000 PRINTED 08/06/2024 BY SYS