LOT 116
HAMPTON LAKES #2 PBK 8/165

BRADLEY JANET M
85041 BISTINEAU COURT
FERNANDINA BEACH, FL 32034

2024

24-2N-27-0721-0116-0000

BUILDING CHARACTERISTICS

ELEMENT	CD	CONSTRUCTION
Exterior Wall	31	HARDIE BRD 100
Roof Structur	03	GABLE/HIP 100
Roof Cover	03	COMP SHNGL 100
Interior Wall	05	DRYWALL 100
Interior Floo	11	CLAY TILE 50
Interior Floo	14	CARPET 50
Air Condition	03	CENTRAL 100
Heating Type	04	AIR DUCTED 100
Bedrooms		4 100
Bathrooms		2.5 100
Frame	02	WOOD FRAME 100
Stories	2.	2. 100
Units		0 100
Occupancy	00	NONE 100
Quality	03	Quality Level 03

DOR CODE	0100	SINGLE FAMILY	
MAP NUM		MKT AREA	04
NEIGHBORHOOD/LOC	4085.00		

AREA TYPE	TOTAL GROSS AREA	PCT OF BASE	TOT ADJ AREA	SUBAREA MARKET VALUE
BAS	1,772	100	1,772	226,655
FGR	428	55	235	30,059
FOP	136	30	41	5,244
FOP	360	30	108	13,814
FST	362	55	199	25,454
FUS	900	100	900	115,119
TOTALS	3,958		3,255	416,346

MARKET ADJUSTMENTS

TYPE	MDL	EFF. AREA	TOT ADJ PTS	EFF. BASE RATE	REPL. COST NEW	AYB	EYB	ECON	FNCT		NORM	% COND
0900	01	3,255	104.4200	130.52	424,843	2018	2018	0	0	0	2.00	98.00

1 SNGL FAM – 100% - 2020 Heated Area: 2672 HX Base Yr

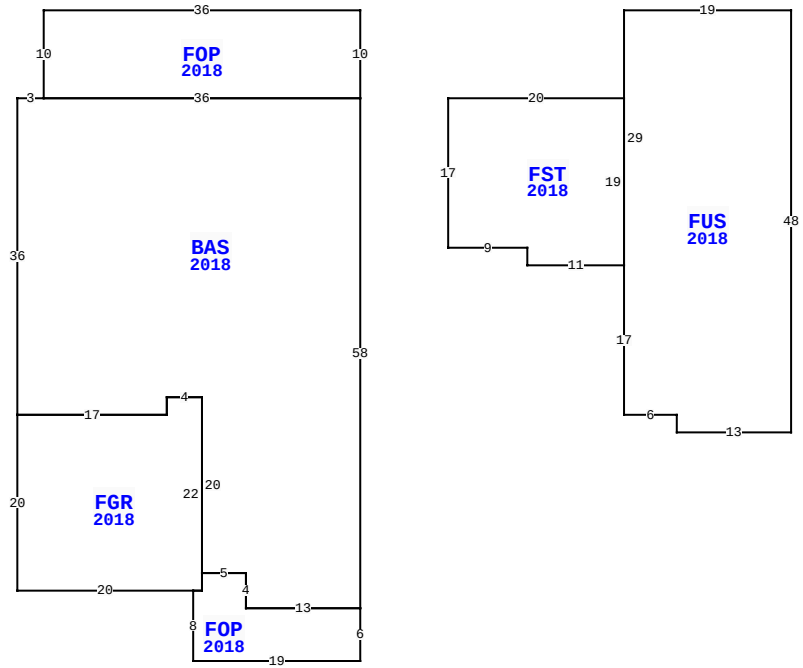

85041 BISTINEAU CT, FERNANDINA BEACH

BLD DATE		LGL DATE	
XF DATE		LAND DATE	06/13/2023 MLU
INC DATE		AG DATE	

NASSAU COUNTY PROPERTY

PAGE 1 of 1 4

VALUATION SUMMARY

VALUATION BY		STANDARD
Tax Group: 4	Tax Dist:	
BUILDING MARKET VALUE		416,346
TOTAL MARKET OB/XF VALUE		6,790
TOTAL LAND VALUE - MARKET		75,000
TOTAL MARKET VALUE		498,136
SOH/AGL Deduction		4,327
ASSESSED VALUE		493,809
TOTAL EXEMPTION VALUE	13	493,809
BASE TAXABLE VALUE		0
TOTAL JUST VALUE		498,136
NCON VALUE		0
INCOME VALUE		
PREVIOUS YEAR MKT VALUE		479,426

PERMIT NUM	DESCRIPTION	AMT	ISSUED
18010511	CO ISSUED	0	10/17/2018
18002535	NEW CONSTR	374,873	03/09/2018

SALES DATA

OFF RECORD Number	DATE	TYPE INST	Q U	V I	RSN CD	SALE PRICE
2276/0777	5/21/2019	SW	Q	I	01	375,200
GRANTOR: AVH NORTH FLORIDA LLC						
GRANTEE: BRADLEY JANET M						
2089/0966	12/16/2016	SW	U	V	37	6,730,600
GRANTOR: AW VENTURE II LLC						
GRANTEE: AVH NORTH FLORIDA L						

BUILDING NOTES

BUILDING DIMENSIONS

FOP=[YR=2018] W36 S10 BAS=[YR=2018] W3 S36 FGR=[YR=2018]
S20 E20 FOP=[YR=2018] S8 E19 N6 W13 N4 W5 S2 W1$ E1 N22 W4
S2 W17$ E17 N2 E4 S20 E5 S4 E13 N58 W36$ E36 N10$
PTR=[YR=2018] E30 FUS=[YR=2018] E19 S48 W13 N2 W6 N17
FST=[YR=2018] W11 N2 W9 N17 E20 S19$ N29$W30$.

EXTRA FEATURES

LN	OB/XF CODE	DESCRIPTION	BLD	CAP	L	W	UNITS	UT	Adj R	ADJ UNIT PRICE	ORIG COND	YEAR ON	YEAR ACTUAL	Q	% COND	OB/XF MKT VALUE	NOTES
1	0855	CONC PAVER	0	100	0	0	700.00	SF	10.00	10.00	100	2018	2018	3	97	6,790	

LAND DESCRIPTION

TOTAL OB/XF 6,790

LN	USE CODE	CLS	LAND USE DESCRIPTION	CAP	RD	LOC ZONE	FRONT	DEPTH	TOT LND UTS	UNIT TYPE	DT	DPTH FACT	% COND	TOT ADJ	UNIT PRICE	ADJ UNIT PRICE	LAND VALUE	OTHER ADJUSTMENTS AND NOTES	YEAR	DENSITY	DECL	FRZ	YR	CONSRV
1	000133	C	SFR LAKE	100		PUD	0.00	0.00	1.00	LT		1.00	1.00	1.00	75,000.00	75,000.00	75,000							

REVIEW DATE 04/11/2019 BY TW Total Acres: 0.00 Total Land Value: 75,000 Market: 0 Agricultural: 0 Common: 75,000 PRINTED 08/06/2024 BY SYS