LOT 96
HAMPTON LAKES #2 PBK 8/165

MADGWICK MARK D & SARAH E
85031 WILLISTON COURT
FERNANDINA BEACH, FL 32034

2024

24-2N-27-0721-0096-0000

NASSAU COUNTY PROPERTY

BUILDING CHARACTERISTICS

ELEMENT	CD	CONSTRUCTION
Exterior Wall	31	HARDIE BRD 100
Roof Structur	03	GABLE/HIP 100
Roof Cover	03	COMP SHNGL 100
Interior Wall	05	DRYWALL 100
Interior Floo	13	LVT/LAMNT 100
Air Condition	03	CENTRAL 100
Heating Type	04	AIR DUCTED 100
Bedrooms		4 100
Bathrooms		3 100
Frame	02	WOOD FRAME 100
Stories	0	0 100
Units		0 100
Occupancy	00	NONE 100
Quality	03	Quality Level 03

DOR CODE 0100 SINGLE FAMILY
MAP NUM | MKT AREA 04
NEIGHBORHOOD/LOC 4085.00

AREA TYPE	TOTAL GROSS AREA	PCT OF BASE	TOT ADJ AREA	SUBAREA MARKET VALUE
BAS	1,751	100	1,751	218,179
FGR	669	55	368	45,854
FOP	136	30	41	5,109
FOP	190	30	57	7,103
FUS	1,032	100	1,032	128,590
STR	70	10	7	873
TOTALS	3,848		3,256	405,706

MARKET ADJUSTMENTS

TYPE	MDL	EFF. AREA	TOT ADJ PTS	EFF. BASE RATE	REPL. COST NEW	AYB	EYB	ECON	FNCT		NORM	% COND
0900	01	3,256	101.2000	126.50	411,884	2019	2019	0	0	0	1.50	98.50

1 SNGL FAM – 100% - 2023 Heated Area: 2783 HX Base Yr 2023

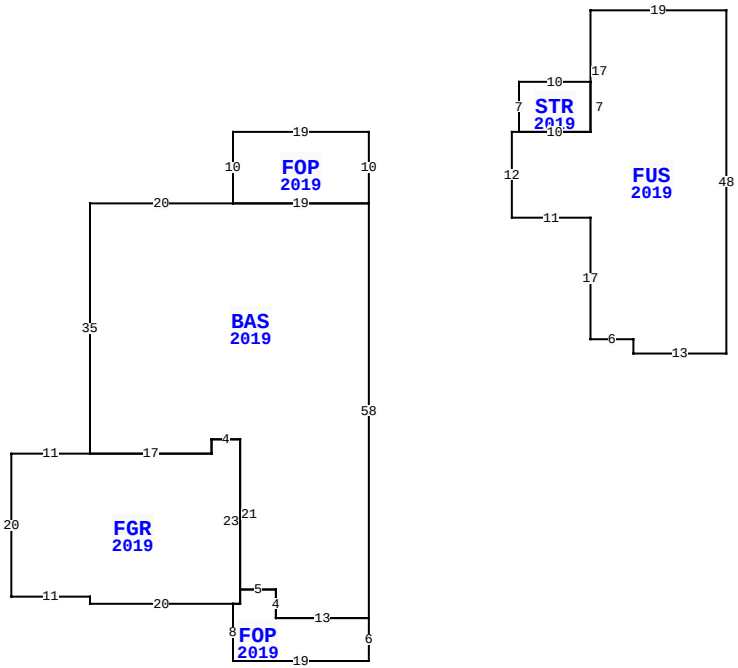

85031 WILLISTON CT, FERNANDINA BEACH

BLD DATE		LGL DATE	
XF DATE		LAND DATE	06/13/2023 MLU
INC DATE		AG DATE	

VALUATION SUMMARY

VALUATION BY		STANDARD
Tax Group: 4	Tax Dist:	
BUILDING MARKET VALUE		405,706
TOTAL MARKET OB/XF VALUE		11,718
TOTAL LAND VALUE - MARKET		75,000
TOTAL MARKET VALUE		492,424
SOH/AGL Deduction		3,817
ASSESSED VALUE		488,607
TOTAL EXEMPTION VALUE	HX HB	50,000
BASE TAXABLE VALUE		438,607
TOTAL JUST VALUE		492,424
NCON VALUE		0
INCOME VALUE		
PREVIOUS YEAR MKT VALUE		474,376

PERMIT NUM	DESCRIPTION	AMT	ISSUED
19005289	CO ISSUED	0	05/21/2019
19000240	NEW CONSTR	348,627	01/09/2019

SALES DATA

OFF RECORD Number	DATE	TYPE INST	Q U	V I	RSN CD	SALE PRICE
2564/1389	5/20/2022	WD	Q	I	01	595,000
GRANTOR: BERNHARD STEVEN C & P						
GRANTEE: MADGWIK MARK D & SA						
2441/0195	3/04/2021	WD	Q	I	01	430,000
GRANTOR: HALL NANCY R						
GRANTEE: BERNHARD STEVEN C &						

BUILDING NOTES

BUILDING DIMENSIONS

FOP=[YR=2019] W19 S10 BAS=[YR=2019] W20 S35 FGR=[YR=2019] W11 S20 E11 S1 E20 FOP=[YR=2019] S8 E19 N6 W13 N4 W5 S2 W1$ E1 N23 W4 S2 W17$ E17 N2 E4 S21 E5 S4 E13 N58 W19$ E19 N10$ PTR=E20 FUS=[YR=2019] E1 STR=[YR=2019] N7 E10 S7 W10$ E10 N17 E19 S48 W13 N2 W6 N17 W11 N12$ W20$.

EXTRA FEATURES

LN	OB/XF CODE	DESCRIPTION	BLD	CAP	L	W	UNITS	UT	Adj R	ADJ UNIT PRICE	ORIG COND	YEAR ON	YEAR ACTUAL	Q	% COND	OB/XF MKT VALUE	NOTES
1	0812	CONCRETE C	0	100	0	0	1,246.00	SF	4.00	4.00	100	2019	2019	3	98	4,884	
2	0462	ST/AL FNC	0	100	174	4	696.00	SF	10.00	10.00	100	2019	2019	3	90	6,264	
3	0463	FENCE GATE	0	100	0	0	2.00	UT	300.00	300.00	100	2019	2019	3	95	570	

LAND DESCRIPTION

TOTAL OB/XF 11,718

LN	USE CODE	CLS	LAND USE DESCRIPTION	CAP	RD	LOC ZONE	FRONT	DEPTH	TOT LND UTS	UNIT TYPE	DT	DPTH FACT	% COND	TOT ADJ	UNIT PRICE	ADJ UNIT PRICE	LAND VALUE	OTHER ADJUSTMENTS AND NOTES	YEAR	DENSITY	DECL	FRZ	YR	CONSRV
1	000133	C	SFR LAKE	100		PUD	0.00	0.00	1.00	LT		1.00	1.00	1.00	75,000.00	75,000.00	75,000							

REVIEW DATE 01/31/2024 BY KBA Total Acres: 0.00 Total Land Value: 75,000 Market: 0 Agricultural: 0 Common: 75,000 PRINTED 08/06/2024 BY SYS