LOT 34
PT OR 2089/966
HAMPTON LAKES #2 PBK 8/165

BUDKE MARK A & LAURA
85357 CHAMPLAIN DRIVE
FERNANDINA BEACH, FL 32034

2024

24-2N-27-0721-0034-0000

BUILDING CHARACTERISTICS

ELEMENT	CD	CONSTRUCTION
Exterior Wall	31	HARDIE BRD 90
Exterior Wall	14	WD SHINGLE 10
Roof Structur	03	GABLE/HIP 100
Roof Cover	03	COMP SHNGL 100
Interior Wall	05	DRYWALL 100
Interior Floo	11	CLAY TILE 60
Interior Floo	14	CARPET 40
Air Condition	03	CENTRAL 100
Heating Type	04	AIR DUCTED 100
Bedrooms		4 100
Bathrooms		3.5 100
Frame	02	WOOD FRAME 100
Stories	2.	2. 100
Units		0 100
Occupancy	00	NONE 100
Quality	03	Quality Level 03
DOR CODE	0100	SINGLE FAMILY
MAP NUM		MKT AREA 04
NEIGHBORHOOD/LOC	4085.00	

AREA TYPE	TOTAL GROSS AREA	PCT OF BASE	TOT ADJ AREA	SUBAREA MARKET VALUE
BAS	1,770	100	1,770	234,271
FGR	428	55	235	31,103
FOP	138	30	41	5,427
FSP	360	40	144	19,059
FUS	1,182	100	1,182	156,445
STR	70	10	7	926
TOTALS	3,948		3,379	447,232

MARKET ADJUSTMENTS

TYPE	MDL	EFF. AREA	TOT ADJ PTS	EFF. BASE RATE	REPL. COST NEW	AYB	EYB	ECON	FNCT		NORM	% COND
0900	01	3,379	107.5480	134.44	454,273	2019	2019	0	0	0	1.55	98.45

1 SNGL FAM – 0% - 0 Heated Area: 2952 HX Base Yr

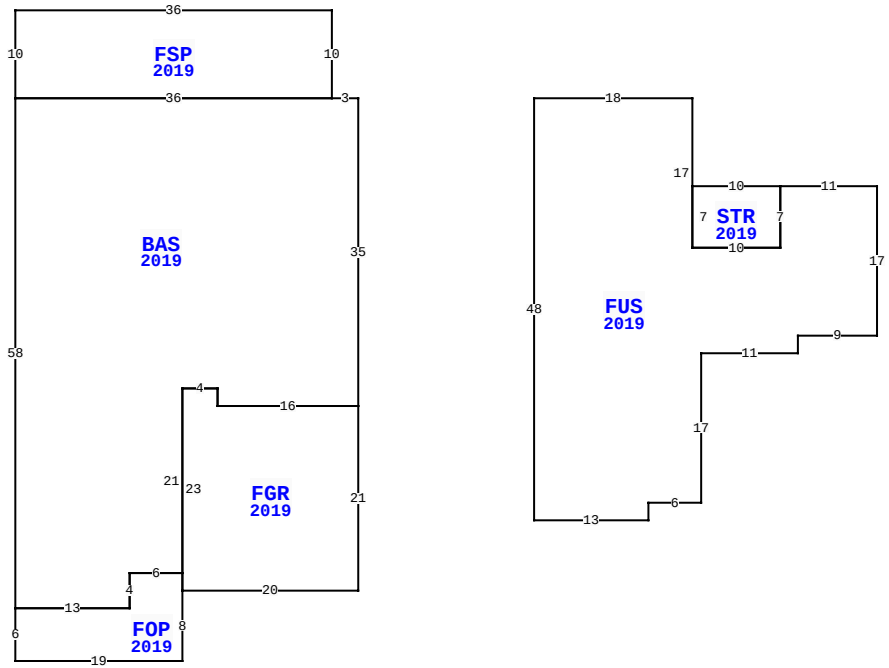

85357 CHAMPLAIN DR, FERNANDINA BEACH

BLD DATE		LGL DATE	
XF DATE		LAND DATE	06/13/2023 MLU
INC DATE		AG DATE	

NASSAU COUNTY PROPERTY

PAGE 1 of 1 4

VALUATION SUMMARY

VALUATION BY	STANDARD
Tax Group: 4	Tax Dist:
BUILDING MARKET VALUE	447,232
TOTAL MARKET OB/XF VALUE	7,281
TOTAL LAND VALUE - MARKET	75,000
TOTAL MARKET VALUE	529,513
SOH/AGL Deduction	51,502
ASSESSED VALUE	478,011
TOTAL EXEMPTION VALUE	0
BASE TAXABLE VALUE	478,011
TOTAL JUST VALUE	529,513
NCON VALUE	0
INCOME VALUE	
PREVIOUS YEAR MKT VALUE	509,357

PERMIT NUM	DESCRIPTION	AMT	ISSUED
19012813	CO ISSUED	0	12/18/2019
19006655	NEW CONSTR	391,798	06/21/2019

SALES DATA

OFF RECORD Number	DATE	TYPE INST	Q / U	V / I	RSN CD	SALE PRICE
2327/0530	12/20/2019	SW	Q	I	01	371,300
GRANTOR: AVH NORTH FLORIDA LLC						
GRANTEE: BUDKE MARK A & LAUR						
2089/0966	12/16/2016	SW	U	V	37	6,730,600
GRANTOR: AW VENTURE II LLC						
GRANTEE: AVH NORTH FLORIDA L						

BUILDING NOTES

BUILDING DIMENSIONS

BAS=[YR=2019] W3 FSP=[YR=2019] N10 W36 S10 E36$ W36 S58
FOP=[YR=2019] S6 E19 N8 FGR=[YR=2019] E20 N21 W16 N2 W4
S23$ N2 W6 S4 W13$ E13 N4 E6 N21 E4 S2 E16 N35$ PTR=E20
FUS=[YR=2019] S48 E13 N2 E6 N17 E11 N2 E9 N17 W11
STR=[YR=2019] W10S7 E10N7$ S7 W10 N17 W18$W20$.

EXTRA FEATURES

LN	OB/XF CODE	DESCRIPTION	BLD	CAP	L	W	UNITS	UT	Adj R	ADJ UNIT PRICE	ORIG COND	YEAR ON	YEAR ACTUAL	Q	% COND	OB/XF MKT VALUE	NOTES
1	0855	CONC PAVER	0	0	0	0	40.00	SF	10.00	10.00	100	2019	2019	3	98	392	
2	0855	CONC PAVER	0	0	0	0	703.00	SF	10.00	10.00	100	2019	2019	3	98	6,889	

LAND DESCRIPTION

TOTAL OB/XF 7,281

LN	USE CODE	CLS	LAND USE DESCRIPTION	CAP	RD	LOC ZONE	FRONT	DEPTH	TOT LND UTS	UNIT TYPE	DT	DPTH FACT	% COND	TOT ADJ	UNIT PRICE	ADJ UNIT PRICE	LAND VALUE	OTHER ADJUSTMENTS AND NOTES	YEAR	DENSITY	DECL	FRZ	YR	CONSRV
1	000100	C	SFR	0		PUD	0.00	0.00	1.00	LT		1.00	1.00	1.00	75,000.00	75,000.00	75,000							

REVIEW DATE 01/22/2020 BY NW Total Acres: 0.00 Total Land Value: 75,000 Market: 0 Agricultural: 0 Common: 75,000 PRINTED 08/06/2024 BY SYS