LOT 60
SOUTHERN PINES OR 2476/315

IVORY DERRICK
36250 SLASH CT
HILLIARD, FL 32046

2024

23-3N-24-3300-0060-0000

NASSAU COUNTY PROPERTY

BUILDING CHARACTERISTICS

ELEMENT	CD	CONSTRUCTION
Exterior Wall	31	HARDIE BRD 90
Exterior Wall	21	STONE 10
Roof Structur	08	IRREGULAR 100
Roof Cover	03	COMP SHNGL 100
Interior Wall	05	DRYWALL 100
Interior Floo	13	LVT/LAMNT 60
Interior Floo	14	CARPET 40
Air Condition	03	CENTRAL 100
Heating Type	04	AIR DUCTED 100
Bedrooms		5 100
Bathrooms		4 100
Frame	02	WOOD FRAME 100
Stories	0	0 100
Units		0 100
Occupancy	00	NONE 100
Quality	04	Quality Level 04

DOR CODE	0100	SINGLE FAMILY	
MAP NUM		MKT AREA	09
NEIGHBORHOOD/LOC	9016.00		

AREA TYPE	TOTAL GROSS AREA	PCT OF BASE	TOT ADJ AREA	SUBAREA MARKET VALUE
BAS	3,412	100	3,412	427,651
FGR	714	55	393	49,257
FOP	146	30	44	5,515
FOP	244	30	73	9,149
FUS	608	100	608	76,205
STR	52	10	5	627
TOTALS	5,176		4,535	568,405

MARKET ADJUSTMENTS

TYPE	MDL	EFF. AREA	TOT ADJ PTS	EFF. BASE RATE	REPL. COST NEW	AYB	EYB	ECON	FNCT		NORM	% COND
0900	01	4,535	100.3233	125.40	568,689	2022	2022	0	0	0	0.05	99.95

1 SNGL FAM – 100% - 2024 Heated Area: 4020 HX Base Yr 2024

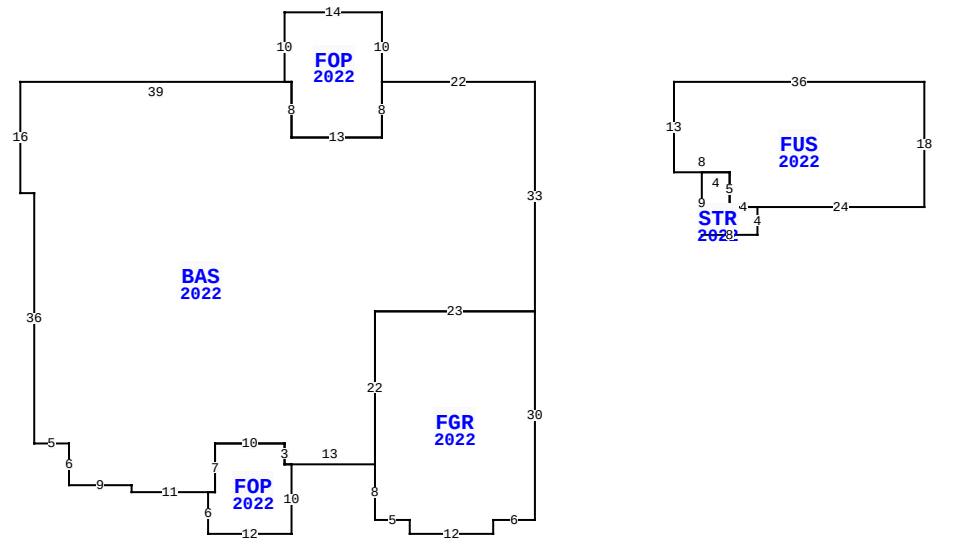

36250 SLASH CT, HILLIARD

BLD DATE		LGL DATE	
XF DATE		LAND DATE	
INC DATE		AG DATE	

VALUATION SUMMARY

VALUATION BY		STANDARD
Tax Group: 4	Tax Dist:	
BUILDING MARKET VALUE		568,405
TOTAL MARKET OB/XF VALUE		11,301
TOTAL LAND VALUE - MARKET		60,000
TOTAL MARKET VALUE		639,706
SOH/AGL Deduction		0
ASSESSED VALUE		639,706
TOTAL EXEMPTION VALUE	HX HB	50,000
BASE TAXABLE VALUE		589,706
TOTAL JUST VALUE		639,706
NCON VALUE		0
INCOME VALUE		
PREVIOUS YEAR MKT VALUE		612,628

PERMIT NUM	DESCRIPTION	AMT	ISSUED
21010398	CO ISSUED	0	09/12/2022
21016992	NEW CONSTR	642,456	12/08/2021

SALES DATA

OFF RECORD Number	DATE	TYPE INST	Q / U	V / I	RSN CD	SALE PRICE
2613/0445	1/09/2023	SW	Q	I	01	749,900

GRANTOR: LGI HOMES-FLORIDA LLC

GRANTEE: IVORY DERRICK

BUILDING NOTES

BUILDING DIMENSIONS

BAS=[YR=2022] W22 FOP=[YR=2022] N10 W14 S10 E1 S8 E13 N8$ S8 W13 N8 W39 S16 E2 S36 E5 S6 E9 S1 E11 FOP=[YR=2022] S6 E12 N10 W1 N3 W10 S7 W1$ E1 N7 E10 S3 E13 FGR=[YR=2022] S8 E5 S2 E12 N2 E6 N30 W23 S22$ N22 E23 N33$ PTR=E20 FUS=[YR=2022] E36 S18 W24 STR=[YR=2022] S4 W8 N9 E4 S5 E4$ W4 N5 W8 N13$ W20$.

EXTRA FEATURES

LN	OB/XF CODE	DESCRIPTION	BLD	CAP	L	W	UNITS	UT	Adj R	ADJ UNIT PRICE	ORIG COND	YEAR ON	YEAR ACTUAL	Q	% COND	OB/XF MKT VALUE	NOTES
1	0812	CONCRETE C	0	100	0	0	2,219.00	SF	4.00	4.00	100	2022	2022	3	100	8,876	
2	0600	SUMMER KIT	0	100	0	0	1.00	UT	2,500.00	2,500.00	100	2022	2022	3	97	2,425	

LAND DESCRIPTION

TOTAL OB/XF 11,301

LN	USE CODE	CLS	LAND USE DESCRIPTION	CAP	RD	LOC ZONE	FRONT	DEPTH	TOT LND UTS	UNIT TYPE	DT	DPTH FACT	% COND	TOT ADJ	UNIT PRICE	ADJ UNIT PRICE	LAND VALUE	OTHER ADJUSTMENTS AND NOTES	YEAR	DENSITY	DECL	FRZ	YR	CONSRV
1	000134	C	SFR POND	100		OR	0.00	0.00	1.00	LT		1.00	1.00	1.00	60,000.00	60,000.00	60,000							

REVIEW DATE 08/10/2022 BY WW Total Acres: 0.00 Total Land Value: 60,000 Market: 0 Agricultural: 0 Common: 60,000 PRINTED 08/06/2024 BY SYS