PT NE1/4 OF SEC 23-2N-24E
IN OR 2655/966 BEING PAR 1 & 2
UTIL ESMT OR 2387-295

HOGAN KATHLEEN
35440 QUAIL ROAD
CALLAHAN, FL 32011

2024

23-2N-24-0000-0001-0000

NASSAU COUNTY PROPERTY

BUILDING CHARACTERISTICS

ELEMENT	CD	CONSTRUCTION
Exterior Wall	20	FACE BRICK 100
Roof Structur	08	IRREGULAR 100
Roof Cover	03	COMP SHNGL 100
Interior Wall	05	DRYWALL 100
Interior Floo	14	CARPET 70
Interior Floo	11	CLAY TILE 30
Air Condition	03	CENTRAL 100
Heating Type	04	AIR DUCTED 100
Bedrooms		4 100
Bathrooms		2.5 100
Frame	02	WOOD FRAME 100
Stories	1.	1. 100
Units		0 100
Occupancy	00	NONE 100
Quality	04	Quality Level 04
DOR CODE	0100	SINGLE FAMILY
MAP NUM		MKT AREA 08
NEIGHBORHOOD/LOC	8001.00	

AREA TYPE	TOTAL GROSS AREA	PCT OF BASE	TOT ADJ AREA	SUBAREA MARKET VALUE
BAS	2,967	100	2,967	407,091
FGR	858	55	472	64,762
FOP	70	30	21	2,881
FSP	630	40	252	34,576
FST	55	55	30	4,117
TOTALS	4,580		3,742	513,426

MARKET ADJUSTMENTS

TYPE	MDL	EFF. AREA	TOT ADJ PTS	EFF. BASE RATE	REPL. COST NEW	AYB	EYB	ECON	FNCT		NORM	% COND
0500	01	3,742	105.7455	158.62	593,556	2005	2005	0	0	0	13.50	86.50

1 SFR CUST – 100% - 2024 Heated Area: 2967 HX Base Yr 2024

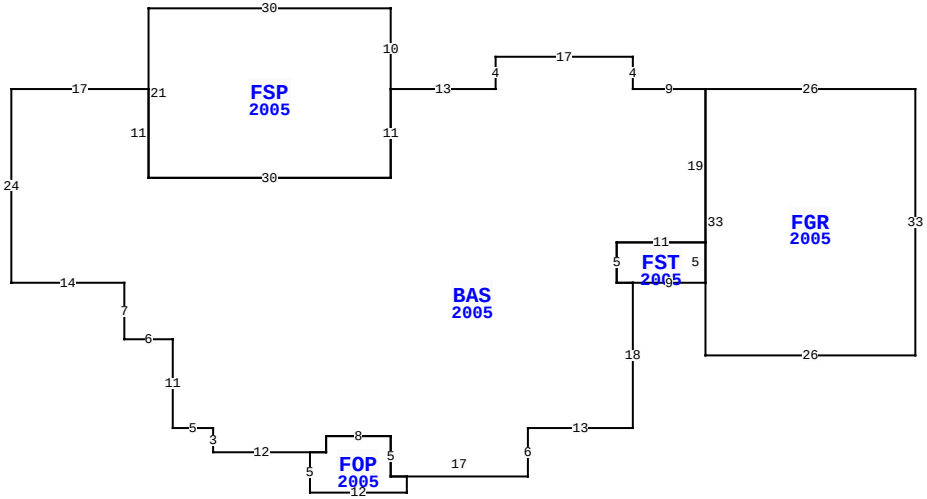

35440 QUAIL RD, CALLAHAN

BLD DATE		LGL DATE	
XF DATE		LAND DATE	05/18/2023 MLU
INC DATE		AG DATE	

VALUATION SUMMARY

VALUATION BY		STANDARD
Tax Group: 6	Tax Dist:	
BUILDING MARKET VALUE		513,426
TOTAL MARKET OB/XF VALUE		62,777
TOTAL LAND VALUE - MARKET		60,120
TOTAL MARKET VALUE		636,323
SOH/AGL Deduction		112,496
ASSESSED VALUE		523,827
TOTAL EXEMPTION VALUE	HX HB	50,000
BASE TAXABLE VALUE		473,827
TOTAL JUST VALUE		636,323
NCON VALUE		0
INCOME VALUE		
PREVIOUS YEAR MKT VALUE		491,476

PERMIT NUM	DESCRIPTION	AMT	ISSUED
22011502	REPAIR/RRF	34,000	07/27/2022
B19895	SWIM POOL	22,800	05/01/2007
B0412682	NEW CONSTR	228,113	01/04/2004
P036604	MH MOVE-ON	0	01/04/2003
MH98	MH MOVE-ON	0	06/01/1998

SALES DATA

OFF RECORD Number	DATE	TYPE INST	Q / U	V / I	RSN CD	SALE PRICE
2655/966	7/20/2023	WD	Q	I	01	730,000
GRANTOR: EVANS JOHNNY L & MARJ						
GRANTEE: HOGAN KATHLEEN						
2399/0449	10/07/2020	WD	Q	I	01	549,900
GRANTOR: CARVER RICHARD T & HO						
GRANTEE: EVANS JOHNNY L & MA						

BUILDING NOTES

BUILDING DIMENSIONS

FGR=[YR=2005] W26 BAS=[YR=2005] W9 N4 W17 S4 W13 FSP=[YR=2005] N10 W30 S21 E30 N11$ S11 W30 N11 W17 S24 E14 S7 E6 S11 E5 S3 E12 FOP=[YR=2005] S5 E12 N2 W2 N5 W8 S2 W2$ E2 N2 E8 S5 E17 N6 E13 N18FST=[YR=2005] E9 N5 W11 S5 E2 $ W2 N5 E11 N19 $ S33 E26 N33$.

EXTRA FEATURES

LN	OB/XF CODE	DESCRIPTION	BLD	CAP	L	W	UNITS	UT	Adj R	ADJ UNIT PRICE	ORIG COND	YEAR ON	YEAR ACTUAL	Q	% COND	OB/XF MKT VALUE	NOTES
1	0504	FP-ELECTRI	0	100	0	0	1.00	UT	2,000.00	2,000.00	100	2005	2005	3	89	1,780	
2	1127	BRICK 8"	0	100	0	0	30.00	SF	5.50	5.50	100	2005	2005	3	96	158	
3	0812	CONCRETE C	0	100	0	0	6,173.00	SF	4.00	4.00	100	2005	2005	3	86	21,235	
4	0465	FNC GT 15'	0	100	0	0	1.00	UT	450.00	450.00	100	2005	2005	3	66	297	
5	0861	POOL GUNIT	0	100	17	27	459.00	SF	85.00	85.00	100	2007	2007	3	48	18,727	
6	0855	CONC PAVER	0	100	0	0	1,385.00	SF	10.00	10.00	100	2007	2007	3	88	12,188	
7	0855	CONC PAVER	0	100	52	8	416.00	SF	10.00	10.00	100	2017	2017	3	97	4,035	
8	0476	VF 6 SBPL	0	100	0	0	148.00	LF	32.00	32.00	100	2017	2017	3	92	4,357	

LAND DESCRIPTION

TOTAL OB/XF 62,777

LN	USE CODE	CLS	LAND USE DESCRIPTION	CAP	RD	LOC ZONE	FRONT	DEPTH	TOT LND UTS	UNIT TYPE	DT	DPTH FACT	% COND	TOT ADJ	UNIT PRICE	ADJ UNIT PRICE	LAND VALUE	OTHER ADJUSTMENTS AND NOTES	YEAR	DENSITY	DECL	FRZ	YR	CONSRV
1	000115	C	SFR ACRES	100	0006	OR	0.00	0.00	3.34	AC		1.00	1.00	1.00	18,000.00	18,000.00	60,120							

REVIEW DATE 11/07/2022 BY WWX Total Acres: 3.34 Total Land Value: 60,120 Market: 0 Agricultural: 0 Common: 60,120 PRINTED 08/06/2024 BY SYS