LOT 13
DEEP CREEK PLANTATION PB 7/239
ESMT IN OR 2562-1829

SPARROW ROBERT JOEL & PRISCILLA ANN
13544 SETTINDOWN DRIVE
BRYCEVILLE, FL 32009

2024

23-1N-23-034D-0013-0000

BUILDING CHARACTERISTICS

ELEMENT	CD	CONSTRUCTION
Exterior Wall	31	HARDIE BRD 100
Roof Structur	08	IRREGULAR 100
Roof Cover	03	COMP SHNGL 100
Interior Wall	05	DRYWALL 100
Interior Floo	12	HARDWOOD 70
Interior Floo	14	CARPET 30
Air Condition	03	CENTRAL 100
Heating Type	04	AIR DUCTED 100
Bedrooms		4 100
Bathrooms		2.5 100
Frame	02	WOOD FRAME 100
Stories	1.	1. 100
Units		0 100
Quality	01	Quality Level 01

DOR CODE	0100	SINGLE FAMILY	
MAP NUM		MKT AREA	09
NEIGHBORHOOD/LOC	9006.00		

AREA TYPE	TOTAL GROSS AREA	PCT OF BASE	TOT ADJ AREA	SUBAREA MARKET VALUE
BAS	1,783	100	1,783	326,646
FGR	768	55	422	77,310
FOP	132	30	40	7,328
FUS	927	100	927	169,826
PTO	180	5	9	1,649
STR	40	10	4	733
TOTALS	3,830		3,185	583,492

MARKET ADJUSTMENTS

TYPE	MDL	EFF. AREA	TOT ADJ PTS	EFF. BASE RATE	REPL. COST NEW	AYB	EYB	ECON	FNCT		NORM	% COND
0500	11	3,185	122.1300	183.20	583,492	2023	2023	0	0	0	0.00	100.00

1 SFR CUST – 0% - 2024 Heated Area: 2710 HX Base Yr

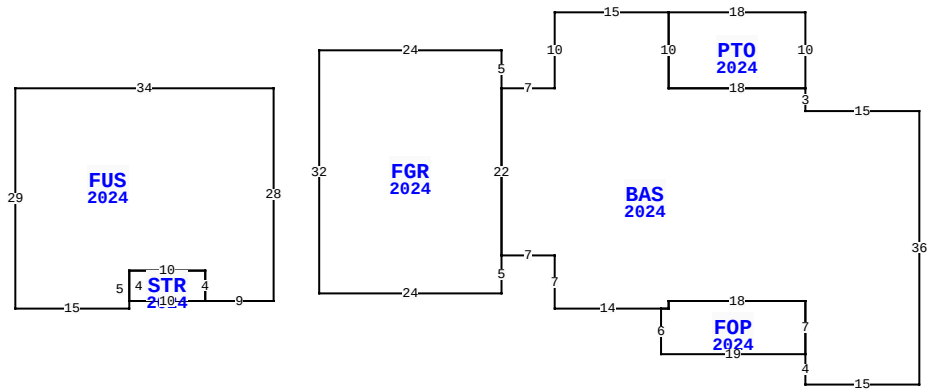

13544 SETTINDOWN DR, BRYCEVILLE

BLD DATE		LGL DATE	
XF DATE		LAND DATE	03/28/2024 MLU
INC DATE		AG DATE	

NASSAU COUNTY PROPERTY

PAGE 1 of 1 6

VALUATION SUMMARY

VALUATION BY	STANDARD
Tax Group: 6	Tax Dist:
BUILDING MARKET VALUE	583,492
TOTAL MARKET OB/XF VALUE	3,500
TOTAL LAND VALUE - MARKET	67,455
TOTAL MARKET VALUE	654,447
SOH/AGL Deduction	0
ASSESSED VALUE	654,447
TOTAL EXEMPTION VALUE	0
BASE TAXABLE VALUE	654,447
TOTAL JUST VALUE	654,447
NCON VALUE	586,992
INCOME VALUE	
PREVIOUS YEAR MKT VALUE	87,480

PERMIT NUM	DESCRIPTION	AMT	ISSUED
230010432	CO ISSUED		08/15/2023
22012164	NEW CONSTR	434,574	08/09/2022

SALES DATA

OFF RECORD Number	DATE	TYPE INST	Q U	V I	RSN CD	SALE PRICE
2662/1802	8/23/2023	WD	Q	I	01	824,500
GRANTOR: WHITNEL CHARLES EDWIN						
GRANTEE: SPARROW ROBERT JOEL						
2543/0336	2/16/2022	WD	Q	V	01	105,000
GRANTOR: HODGES TONY						
GRANTEE: WHITNEL CHARLES EDW						

BUILDING NOTES

BUILDING DIMENSIONS

BAS=[YR=2024;ORIG=100,3] W15 N3 W18 N10 W15 S10 W7 S22 E7 S7 E14 E1 N1 E18 S7 S4 E15 N36 $
FUS=[YR=2024;ORIG=-19,0] E34 S28 W9 N4 W10 S5 W15 N29 $
STR=[YR=2024;ORIG=-4,24] S4 E10 N4 W10 $
FGR=[YR=2024;ORIG=45,-5] W24 S32 E24 N5 N22 N5 $
PTO=[YR=2024;ORIG=85,0] N10 W18 S10 E18 $
FOP=[YR=2024;ORIG=85,28] W18 S1 W1 S6 E19 N7 $
.

EXTRA FEATURES

LN	OB/XF CODE	DESCRIPTION	BLD	CAP	L	W	UNITS	UT	Adj R	ADJ UNIT PRICE	ORIG COND	YEAR ON	YEAR ACTUAL	Q	% COND	OB/XF MKT VALUE	NOTES
1	0500	FP-PRE FAB	0	0	0	0	1.00	UT	3,500.00	3,500.00	100	2024	2023		100	3,500	

LAND DESCRIPTION

TOTAL OB/XF 3,500

LN	USE CODE	CLS	LAND USE DESCRIPTION	CAP	RD	LOC ZONE	FRONT	DEPTH	TOT LND UTS	UNIT TYPE	DT	DPTH FACT	% COND	TOT ADJ	UNIT PRICE	ADJ UNIT PRICE	LAND VALUE	OTHER ADJUSTMENTS AND NOTES	YEAR	DENSITY	DECL	FRZ	YR	CONSRV
1	000115	C	SFR ACRES	0	0006	OR	0.00	0.00	3.14	AC		1.00	1.00	1.00	20,000.00	20,000.00	62,800							
2	009605	C	WETLANDS	0	0006	OR	0.00	0.00	9.31	AC		1.00	1.00	1.00	500.00	500.00	4,655							

REVIEW DATE 10/02/2023 BY WW Total Acres: 12.45 Total Land Value: 67,455 Market: 0 Agricultural: 0 Common: 67,455 PRINTED 08/06/2024 BY SYS