PT E1/2 OF LOT 8 PAR 8-1
PT OR 2506/1682
DUNNS SURVEY DBK B-10/48

BUCKLAND KARA
95114 CORNFLOWER DR
FERNANDINA BEACH, FL 32034

2024

22-3N-24-2320-0008-0010

NASSAU COUNTY PROPERTY

BUILDING CHARACTERISTICS

ELEMENT	CD	CONSTRUCTION
Exterior Wall	13	PREFAB PNL 100
Roof Structur	03	GABLE/HIP 100
Roof Cover	12	MODULAR MT 100
Interior Wall	05	DRYWALL 100
Interior Floo	14	CARPET 70
Interior Floo	08	SHT VINYL 30
Air Condition	03	CENTRAL 100
Heating Type	04	AIR DUCTED 100
Bedrooms		3 100
Bathrooms		1.5 100
Frame	02	WOOD FRAME 100
Stories	1.	1. 100
Units		0 100
BUD8 Adjustme	04	DIST 01 100
Occupancy	00	NONE 100
Quality	03	Quality Level 03
DOR CODE	0100	SINGLE FAMILY
MAP NUM		MKT AREA 09
NEIGHBORHOOD/LOC	9001.00	

AREA TYPE	TOTAL GROSS AREA	PCT OF BASE	TOT ADJ AREA	SUBAREA MARKET VALUE
BAS	1,302	100	1,302	110,511
BAS	128	100	128	10,864
DCK	64	10	6	509
FOP	128	30	38	3,226
UST	24	45	11	934
TOTALS	1,646		1,485	126,043

MARKET ADJUSTMENTS

TYPE	MDL	EFF. AREA	TOT ADJ PTS	EFF. BASE RATE	REPL. COST NEW	AYB	EYB	ECON	FNCT		NORM	% COND
0100	01	1,485	107.0000	101.65	150,950	1965	1990	0	0	0	16.50	83.50

1 SINGLE FAM – 0% - 0 Heated Area: 1430 HX Base Yr

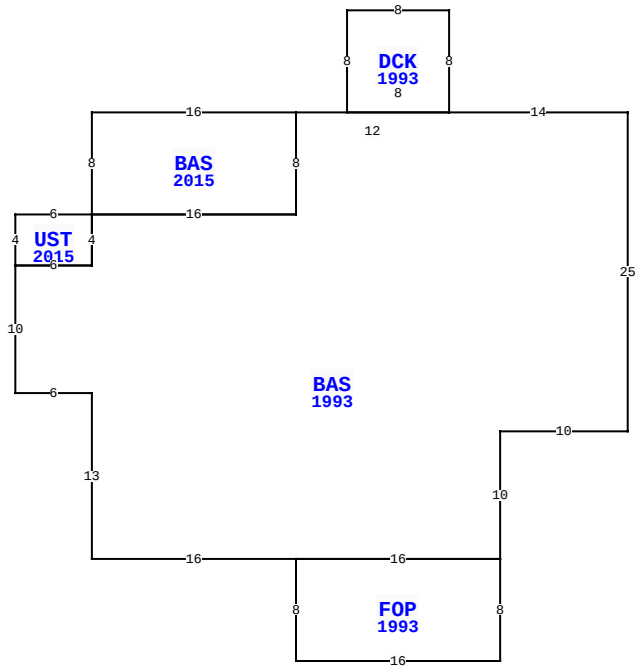

36551 PRATT SIDING RD, CALLAHAN

BLD DATE	06/05/2008 JH	LGL DATE	
XF DATE		LAND DATE	06/13/2023 MLU
INC DATE		AG DATE	

VALUATION SUMMARY

VALUATION BY	STANDARD
Tax Group: 4	Tax Dist:
BUILDING MARKET VALUE	126,043
TOTAL MARKET OB/XF VALUE	1,344
TOTAL LAND VALUE - MARKET	30,000
TOTAL MARKET VALUE	157,387
SOH/AGL Deduction	0
ASSESSED VALUE	157,387
TOTAL EXEMPTION VALUE	0
BASE TAXABLE VALUE	157,387
TOTAL JUST VALUE	157,387
NCON VALUE	0
INCOME VALUE	
PREVIOUS YEAR MKT VALUE	151,882

PERMIT NUM	DESCRIPTION	AMT	ISSUED
E962694	CHNGE SRVC	0	02/01/1996

SALES DATA

OFF RECORD Number	DATE	TYPE INST	Q U	V I	RSN CD	SALE PRICE
2506/1682	10/18/2021	PR	U	I	19	100
GRANTOR: BUCKLAND KARA P/R OF						
GRANTEE: BUCKLAND KARA						
1765/0109	9/20/2011	QC	U	I	12	63,270
GRANTOR: KELLEY JODY & RAY THO						
GRANTEE: SMITH KATHY E						

BUILDING NOTES

BUILDING DIMENSIONS

BAS=[YR=1993] W14 DCK=[YR=1993] N8 W8 S8 E8$ W12
BAS=[YR=2015] W16 S8 UST=[YR=2015] W6 S4 E6 N4$ E16 N8$ S8 W16 S4 W6 S10 E6 S13 E16 FOP=[YR=1993] S8 E16 N8 W16$ E16 N10 E10 N25$.

EXTRA FEATURES

LN	OB/XF CODE	DESCRIPTION	BLD	CAP	L	W	UNITS	UT	Adj R	ADJ UNIT PRICE	ORIG COND	YEAR ON	YEAR ACTUAL	Q	% COND	OB/XF MKT VALUE	NOTES
1	0940	SHEDS/PORT	0	0	8	8	64.00	SF	30.00	30.00	100	2015	2015	3	70	1,344	

LAND DESCRIPTION

TOTAL OB/XF 1,344

LN	USE CODE	CLS	LAND USE DESCRIPTION	CAP	RD	LOC ZONE	FRONT	DEPTH	TOT LND UTS	UNIT TYPE	DT	DPTH FACT	% COND	TOT ADJ	UNIT PRICE	ADJ UNIT PRICE	LAND VALUE	OTHER ADJUSTMENTS AND NOTES	YEAR	DENSITY	DECL	FRZ	YR	CONSRV
1	000115	C	SFR ACRES	0	0005	OR	150.00	291.00	1.00	AC		1.00	1.00	1.00	30,000.00	30,000.00	30,000							

REVIEW DATE 06/02/2020 BY TWA Total Acres: 1.00 Total Land Value: 30,000 Market: 0 Agricultural: 0 Common: 30,000 PRINTED 08/06/2024 BY SYS